7 CLASSIC TOOLS for the Modern Shop

Details of Craftsmanship WORKING WITH THE GRAIN

ALL-NEW Router Jig

Woodsmith®

Woodsmith.com

Vol. 35 / No. 206

OAK DRESSER

Classic Design Meets Modern Techniques

INSIDE—

Routing Profiles: Simple Strategies, Crisp Results

Essential Power Tool Tips & Tricks

Gel Stains: Master the Technique for Great Results

A Publication of August Home Publishing

Table of Contents

from our readers
Tips & Techniques 4

all about
Rediscovering Walnut 8
Here's everything you need to know about this premier American hardwood.

tools of the trade
7 Classic Tools 10
These "forgotten" hand tools are still essential for every workshop.

jigs & fixtures
All New Router Jig 12
This handy kit makes it a snap to rout all kinds of decorative signs.

techniques from our shop
Woodsmith GO ONLINE EXTRAS
No-Hassle Sharpening 14
Put a razor-sharp edge on chisels and plane irons in minutes with this simple technique.

tips from our shop
Shop Notebook 33

woodworking technique
Routing Perfect Profiles 42
Routing clean, crisp profiles is easy with these handy tips and tricks.

working with tools
Essential Power Tool — Updated. . . 44
Learn about the latest cordless drills and how to get the most from one.

finishing room
Better Results with Gel Stains . . 46
Take the hassle out of adding color to a project by using a gel stain.

details of craftsmanship
Working with Edge Grain 48
Here's what you need to know to make the best use of grain on your next project.

in the mailbox
Q & A 50

hardware & supplies
Sources 51

Modular Display Stand page 16

Tall Oak Dresser page 22

projects

weekend project

Modular Shelving System 16

This project features simiple joinery and knock-down construction. But the modular design is the key to making it fit your needs.

heirloom project

Tall Oak Dresser 22

Simple construction techniques make this an easy build. Timeless details allow it to fit any décor. Best of all, it's just the first piece in a complete bedroom suite.

designer series project

Kitchen Cart 34

Gain a much-needed worksurface and easy-access storage with this mobile workstation. The compact design allows you to store it out of the way, and the cutting board is removable for fast and convenient cleaning.

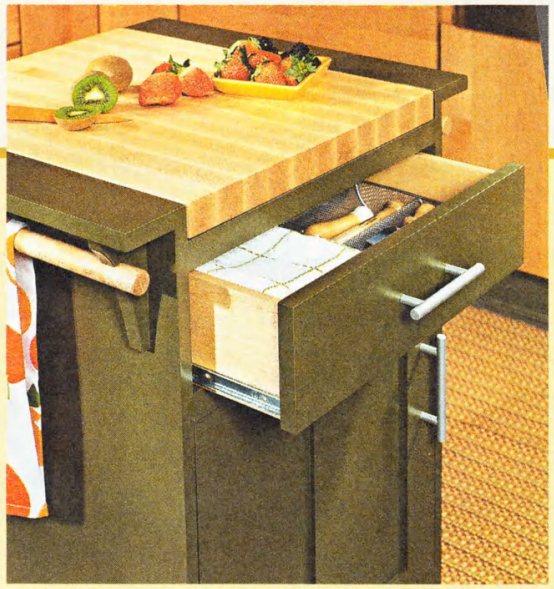

Kitchen Cart page 34

editor's note
Sawdust

One project, or should I say collection of projects, on my bucket list is a bedroom suite. Nothing fancy, just a basic set that includes a bed, nightstand, dresser, and mirror. And something with a timeless look. Unfortunately, I could never find just what I was looking for — until now.

BEDROOM SUITE. If you check out the lower right photo on the opposite page (and the article starting on page 22), you'll see an elegant dresser. It's the first piece of a complete bedroom suite. The rest of the collection will appear in future issues, but you can see all of the other pieces by turning to page 23.

In the past, we've built a piece of furniture and then added matching pieces over a span of years. This time, we're showing you the full suite right from the start. This way, you know exactly what the entire grouping looks like and you can build with confidence knowing that plans for a great set of matching pieces will be coming soon.

MODULAR SHELVING. When Ted Kralicek, our design director, mentioned that he was working on a "plant stand," I wasn't quite sure what to expect. The result you see on page 16 ended up being something more than just a place to set a few potted plants. It's actually a modular shelving system that can be used for plants and any other items you want to display. The three-piece design allows you to create a configuration to suit your needs, now and in the future.

KITCHEN CART. Finally, the last project in this issue addresses something everyone needs — more workspace and storage in the kitchen. The kitchen cart (page 34) acts like a mobile island you bring out when you need it and store away when you're done. The removable cutting board is always at the ready and there's loads of storage close at hand.

Bryan

Woodsmith GO ONLINE EXTRAS

This symbol lets you know there's more information online at Woodsmith.com. There you'll see step-by-step videos, technique and project animation, bonus cutting diagrams, and a lot more.

Tips & Techniques

Workbench Tool Rack

I have a habit of letting my benchtop get cluttered with tools. This pull-out rack keeps my frequently used hand tools off the benchtop but still within easy reach.

RACK OVERVIEW. The rack is a plywood box with a back made from pegboard for extra tool storage. A pair of holders inside the box accept chisels and screwdrivers. And a tray at the top corrals other items you want to keep handy.

MAKE THE RACK. After sizing the parts, cut dadoes in the sides for the top, bottom, and tool holders. Then cut a groove in the top, bottom, and sides to accept the pegboard back. (There's also one more groove in the bottom for a hardboard lip.) Some options for tool holders are shown below.

At this point, you can glue up the entire assembly. Also glue in filler strips at the top and bottom. These form the tray on top and give you a place to mount the drawer slides. There's also a hardboard lip added to the bottom.

The rack mounts to the side of the bench with heavy-duty drawer slides, as shown above.

Jack Handley
Orland Park, Illinois

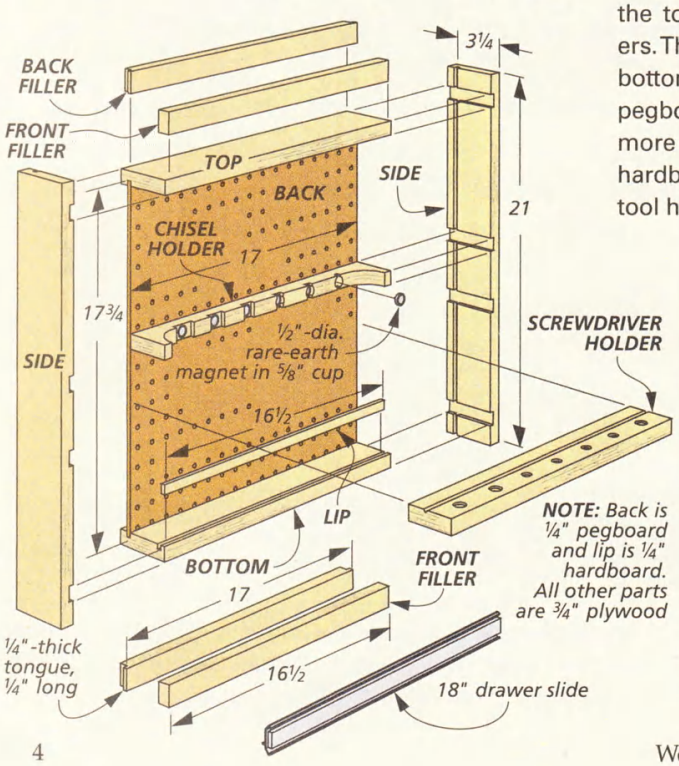

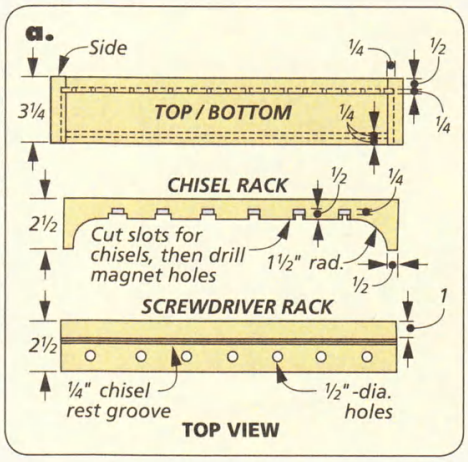

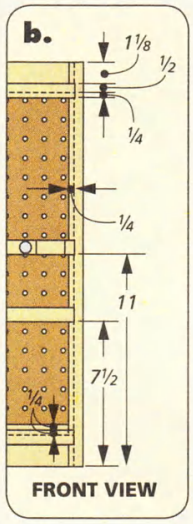

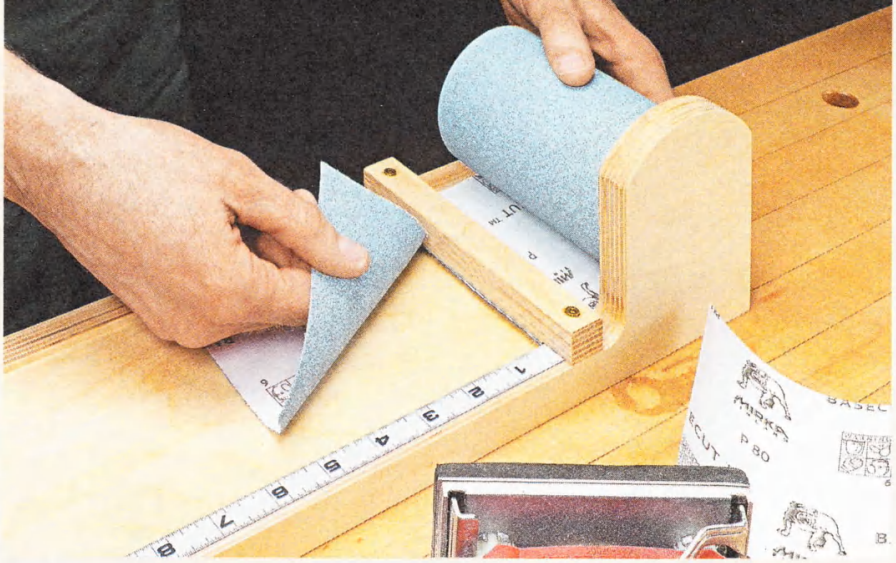

Sandpaper Dispenser

Self-adhesive sandpaper is great, but it can be difficult to cut it cleanly from the roll. So I came up with this handy dispenser to solve the problem.

It consists of a plywood base sandwiched between two guide rails. One of the rails has a tall face at one end with a dowel mounted on it. The dowel allows the sandpaper to unroll easily.

A plywood strip with an added hacksaw blade lets you cut the paper to length. By installing a measuring tape along the guide rail, you can measure out the precise length of sandpaper you need before cutting it (photo, above).

Albert Santoni
Iron Mountain, Michigan

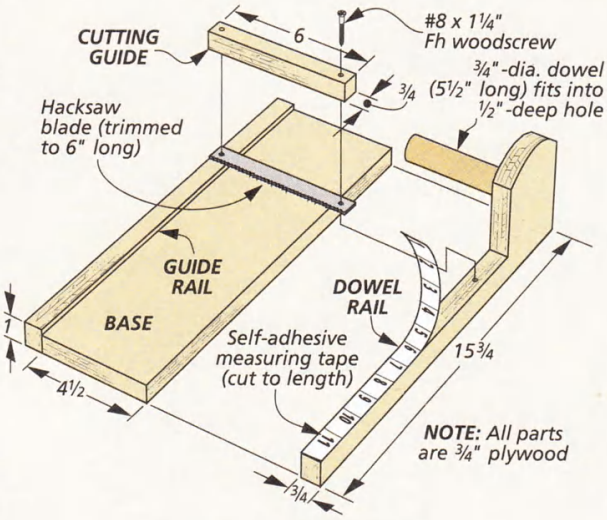

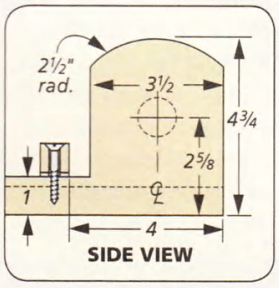

SUBMIT YOUR TIPS ONLINE

If you have an original shop tip, we would like to hear from you and consider publishing your tip in one or more of our publications. Go to:

Woodsmith.com
Click on the link,
"SUBMIT A TIP"

You'll be able to tell us all about your tip and upload your photos and drawings. You can also mail your tips to *"Woodsmith Tips"* at the editorial address shown at right. We will pay up to $200 if we publish your tip.

FREE TIPS BY EMAIL

Now you can have the best, time-saving secrets, solutions, and techniques sent directly to your email inbox. Just go to **Woodsmith.com** and click on ***"Woodsmith Tips"*** You'll receive one of our favorite tips each week.

Woodsmith®

No. 206 April/May 2013

PUBLISHER Donald B. Peschke

EDITOR Bryan Nelson
MANAGING EDITOR Vincent Ancona
SENIOR EDITORS Ted Raife, Wyatt Myers
ASSOCIATE EDITOR Dennis Perkins
CONTRIBUTING EDITORS Phil Huber, Randall A. Maxey, James Bruton
EDITORIAL INTERN Kristen Smith

EXECUTIVE ART DIRECTOR Todd Lambirth
SENIOR ILLUSTRATORS Harlan V. Clark, Erich Lage, David Kallemyn
SENIOR GRAPHIC DESIGNERS Bob Zimmerman, Shelley Cronin
GRAPHIC DESIGNER Becky Kralicek
CONTRIBUTING ILLUSTRATORS Dirk Ver Steeg, Peter J. Larson
CREATIVE DIRECTOR Ted Kralicek
SENIOR PROJECT DESIGNERS Ken Munkel, Kent Welsh, Chris Fitch, Jim Downing
PROJECT DESIGNER/BUILDER John Doyle
SHOP CRAFTSMEN Steve Curtis, Steve Johnson
SENIOR PHOTOGRAPHERS Crayola England, Dennis Kennedy
ASSOCIATE STYLE DIRECTOR Rebecca Cunningham
SENIOR ELECTRONIC IMAGE SPECIALIST Allan Ruhnke
PRODUCTION ASSISTANT Minniette Johnson
VIDEO EDITOR/DIRECTOR Mark Hayes

Woodsmith® (ISSN 0164-4114) is published bimonthly by August Home Publishing Company, 2200 Grand Ave, Des Moines, IA 50312.

Woodsmith® is a registered trademark of August Home Publishing.
Copyright© 2013 August Home Publishing Company. All rights reserved.

Subscriptions: Single copy: $4.95.
Canadian Subscriptions: Canada Post Agreement No. 40038201. Send change of address information to PO Box 881, Station Main, Markham, ON L3P 8M6.
Canada BN 84597 5473 RT
Periodicals Postage Paid at Des Moines, IA, and at additional offices.
Postmaster: Send change of address to *Woodsmith*, Box 37106, Boone, IA 50037-0106.

WoodsmithCustomerService.com

ONLINE SUBSCRIBER SERVICES
- **VIEW** your account information
- **RENEW** your subscription
- **CHECK** on a subscription payment
- **PAY** your bill
- **CHANGE** your mailing or e-mail address
- **VIEW/RENEW** your gift subscriptions
- **TELL US** if you've missed an issue

CUSTOMER SERVICE Phone: 800-333-5075

SUBSCRIPTIONS
Customer Service
P.O. Box 842
Des Moines, IA 50304-9961
subscriptions@augusthome.com

EDITORIAL
Woodsmith Magazine
2200 Grand Avenue
Des Moines, IA 50312
woodsmith@woodsmith.com

AUGUST HOME PUBLISHING COMPANY

Printed in U.S.A.

Door Mounting Aid

Mounting cabinet doors is often easier said than done. Getting the hinges mounted to the door usually isn't too difficult. But when it comes time to align the door on the cabinet face frame and screw it in place, the exercise can become awkward and sometimes frustrating.

What you really need to make the job easier is a "third hand" to align and hold the door in place while you attach the hinge to the face frame. So that's exactly what I built: A support beam that clamps to the cabinet face frame and holds the door in position.

As you can see, this door mounting aid isn't too complicated. It consists of two wood arms that are parallel to one another and offset just a bit. They're connected by a spacer. By clamping one arm to the cabinet bottom, you can use the other arm to support the door as you align it against the cabinet face frame.

Of course, not every cabinet door is installed the same way. So I added a bolt to make it adjustable. You just turn the bolt to fine-tune the position of the door in the cabinet opening.

Then, once you get the door mounting aid all set up, it's a simple matter to set the door in place and attach the hinge to the cabinet face frame by driving in the screws (photo above).

David Ruhnke
Austin, Minnesota

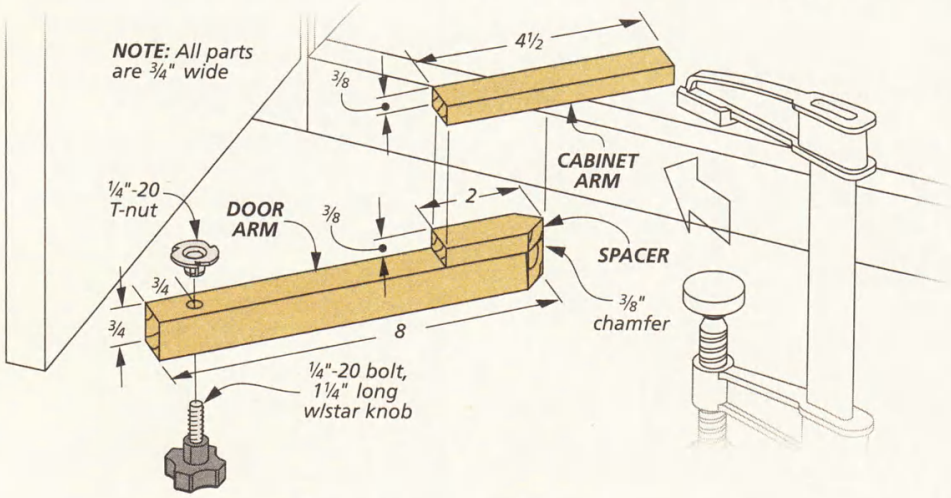

Extension Cord Tote

A loose extension cord can be a tripping hazard in the shop. I found an easy way to tidy up by making this extension cord organizer that's also portable.

The key component of the cord tote is an inexpensive plastic garden hose holder purchased from a local home center. Though it's made for garden hoses, it does a great job holding a wound-up extension cord, too. And by screwing the holder to a piece of plywood with a cut-out handle, it's easy to take the tote with you.

Joel Drobes
Freehold, New Jersey

Routed Circles

Cutting a circular workpiece is a common woodworking challenge. There are several methods, but I found one that I come back to time and again — making it on the router table.

In order to make circles at the router table, all you need is a large plywood base (below). A runner on the edge of the base rides along the side of the router table to let you rout into the base with control. And a dowel on the base creates a pivot point for rotating a workpiece above it.

You can cut circles of varying diameter with this method. Just cut into the base with the router bit until the distance from the center of the dowel to the edge of the bit matches the radius of your circle. Then clamp the base in place.

Next, cut the blank to size as shown below, and drill a hole in the center of the blank to fit over the dowel in the base. With the blank in place, turn on the router, and rotate it counter-clockwise. A thick blank will need to be routed by raising the bit slightly between each pass.

Bill Wells
Olympia, Washington

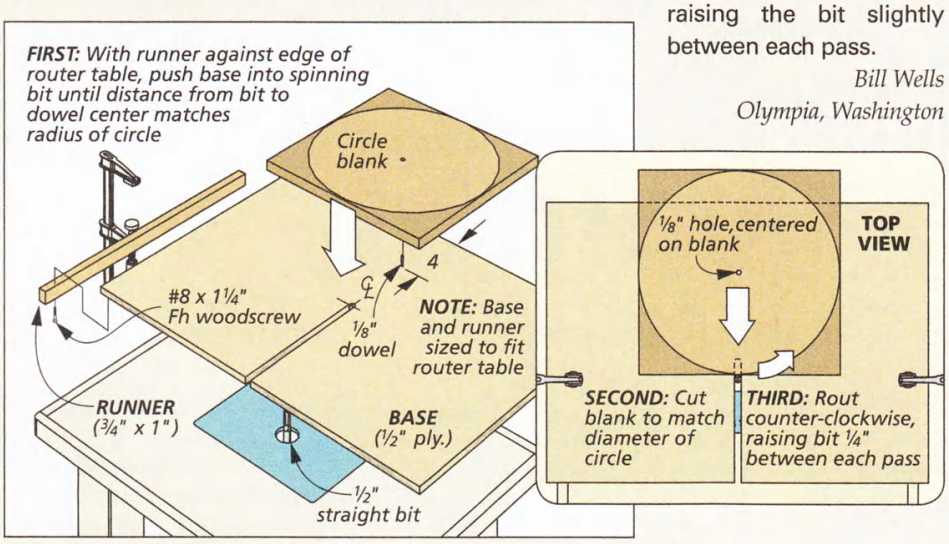

Quick Tips

DRAWER FRONT PLACEMENT

To accurately position a false front on a drawer, *Bryan Nelson* of Ankeny, Iowa, installs screws in the drawer front. Then he presses the false front firmly against them to mark locations for pilot holes.

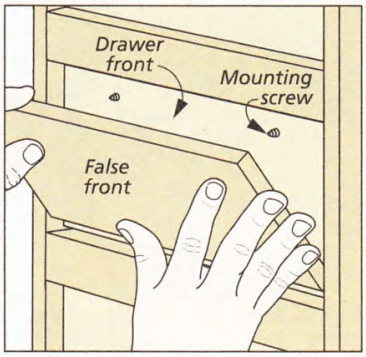

SANDPAPER FILES

Len Urban from Rancho Mirage, California, makes sandpaper "files" for detail work by simply attaching strips of self-adhesive sandpaper to paint stir sticks.

WIN THIS PORTER CABLE COMBO ROUTER

Simply send us your favorite shop tips. If your tip or technique is selected as the featured reader's tip, you'll win a *Porter Cable* combo router kit just like the one shown here. To submit your tip or technique, just go online to *Woodsmith.com* and click on the link, "SUBMIT A TIP." You can submit your tip and upload your photos for consideration.

The Winner!

Congratulations to Albert Santoni, the winner of this Porter Cable router. To find out how you can win this router kit, check out the information on the left.

classic Walnut

One of the quintessential American hardwoods, walnut may be a great choice for your next project.

◄ Walnut features a very sharp contrast between the light-colored sapwood and darker heartwood.

▼ When air dried, walnut retains the different colors, from red to deep brown and purple.

When you think of the classic American hardwoods, the list just isn't complete without walnut. Its distinctive rich and dark hues are beautiful and unique. Given its beauty, it's no surprise that walnut has been sought out by furniture makers for hundreds of years.

SPECIES. The species commonly seen in America is black walnut (*Juglans nigra*). English walnut (*Juglans regia*) can also be found. Another variety, claro walnut (*Juglans hindsii*), is native to northern California. English and claro are often combined by grafting an English cutting to a claro root. Very rarely, this graft produces a hybrid with striking figure and color. This hybrid is known as *Paradox* or *Bastogne* walnut.

Native to the northeast through the midwestern United States, black walnut trees grow to around 100' tall with 3'- to 4'-diameter trunks. The broad canopy accounts for the wide dispersion of the large nuts that make it a favorite of squirrels everywhere.

TOXICITY. It's tough to get anything to grow near a walnut tree. The tree's natural defenses are toxic to many plants. And it doesn't stop there. In the shop, the dust created by working with walnut can be a breathing hazard. That's why it's important to use good dust collection and an overhead air cleaner when working with walnut. Even if you've used walnut for years, you can develop a sensitivity from prolonged contact.

▲ The beautiful color and grain of walnut make it a great choice for almost any style of furniture. On top of that, it holds fine details well, so routed edges and profiles stand out.

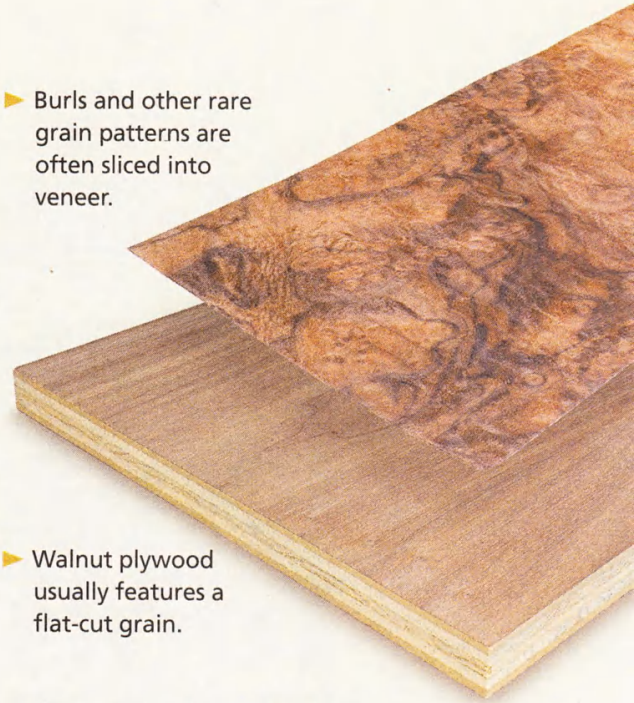

► Burls and other rare grain patterns are often sliced into veneer.

► Walnut plywood usually features a flat-cut grain.

FEATURES. Walnut cuts and works very well with hand and power tools. And although it's quite hard, it carves well and holds crisp edges and details. One of the best features of walnut is its stability. These properties have long made it a staple of furniture makers in Europe and America.

Walnut has very distinctive light-colored sapwood (top photo in the margin on the opposite page). Because this is not desirable for most applications, the wood is often steamed before drying in an attempt to balance the heartwood and sapwood colors.

The result is a toned-down brownish-gray wood that's found at most lumberyards and suppliers. Air-drying walnut preserves the natural array of colors found in the wood. You'll find several shades of brown, from dark chocolate to coffee-colored, in addition to streaks of red and purple.

PLYWOOD. Walnut plywood is available in conventional ply or MDF core and is a favorite of cabinetmakers. Usually the plywood sheet will have an "A" and "B" side, with a rotary-cut, continuous grain for the "A" side. The "B" side usually consists of straight-cut sections, occasionally containing sapwood. The piece shown in the upper right photo is a good example.

FIGURE. Few woods offer the range of possible figure that can be found in walnut. Walnut exhibits everything from curly and feathery crotch figure to exotic burls. The vase in the photo below displays a great example of crotch figure.

The main photo on the opposite page shows a nicely figured curly walnut. In this case, the curl runs through both the heartwood and sapwood. The box is a good example of how you can incorporate the sapwood to your advantage in a project.

VENEERS. Many of the best walnut logs are cut into veneers. The burled veneer in the above right photo shows just how wild the figure can be in walnut.

These veneers aren't too rare, either, so the prices are usually reasonable. Veneer flitches are common enough to provide a matching grain pattern in even the largest tabletops and other sizeable projects.

FINISHING. A coat of oil is all it takes to bring out the beauty of walnut. But stain can help if you need to blend the colors. Since it's an open-grain wood, you'll need to fill the pores first if you want a high-gloss finish.

OTHER USES. In addition to furniture, walnut is the standard for gun stocks. In fact, many of the choicest pieces of figured walnut are reserved for gun makers and custom shops. These treasured blanks can fetch several hundred dollars for a small piece.

Instrument builders, particularly guitar makers, also seek out the most attractive stock. In this application, *Paradox* or *Bastogne* walnut are preferred for their superior figure and palette of colors.

While walnut can be a bit pricey, it's well worth consideration for your next project. W

▼ Crotch grain walnut displays a striking, feathery pattern.

7 forgotten Hand Tools

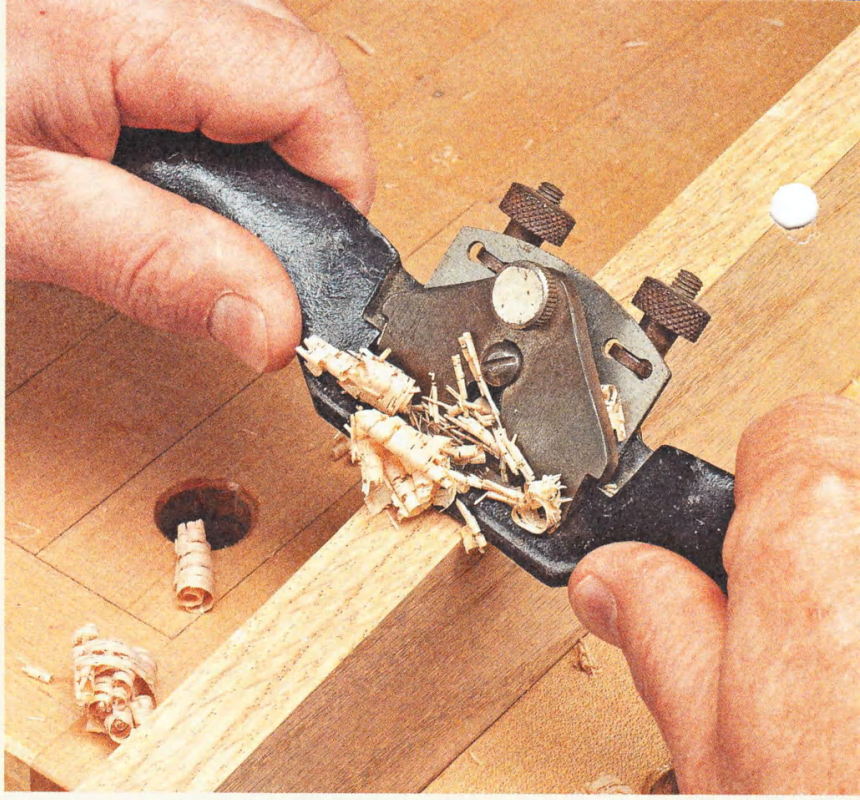

I guarantee these traditional tools won't just sit on the shelf. You'll find them all to be handy and efficient problem solvers.

I confess to being an avid and unrepentant vintage hand tool collector. I can't resist a good tool auction or pass by a second-hand or antique store without at least stopping to take a quick look.

But I do have one rule: I rarely buy an old (or new) hand tool just for display. The tools I buy are fully functional ones I can use in the shop. Consequently, I've accumulated some tools from yesteryear that might be considered obsolete in a modern shop — that is, until they're needed. I'll introduce you to a few that don't gather much dust in my shop.

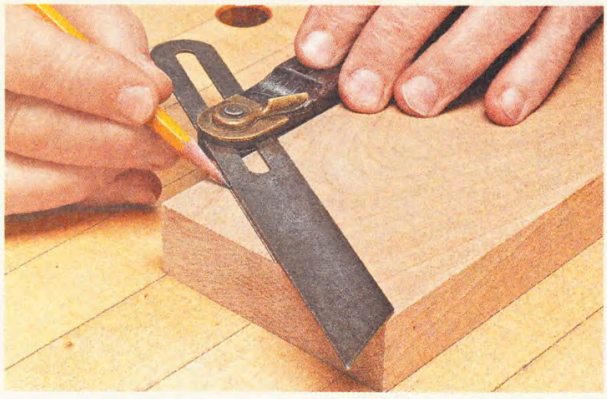

▼ An adjustable bevel gauge can handle a variety of basic layout tasks.

1 Spokeshave

Before the days of flush-trim bits and sanding drums, a spokeshave was standard issue in every shop. A spokeshave (photo above) works like a hand plane for shaping and smoothing curved or irregular workpieces. The advantage is that it will remove material quickly while also providing good control. After cutting a contoured workpiece to rough shape at the band saw, I often reach for my spokeshave to smooth and refine the form. With practice, a "planed" surface is achievable.

2 Bevel Gauge

Not all woodworking is square. So somewhere along the line, a clever toolmaker invented the bevel gauge (left photo).

You'll find that a traditional bevel gauge, with its adjustable, sliding blade, is an extremely versatile layout tool. You can use it to mark a bevel, find or transfer an angle, or even set up a tool. I regularly rely on mine for marking out dovetail layouts.

▲ A bullnose rabbet can trim into tight corners that are unreachable by other planes.

3 Bullnose Rabbet Plane

I've gained an outsized respect for this small plane with the odd name. It's saved me time and frustration on many occasions. With its full-width iron set far forward in the body, a bullnose rabbet allows you to trim very close to an abutting surface. This can make otherwise tricky post-assembly fitting and fine-tuning much more manageable.

4 Winding Sticks

If you had to reduce woodworking to its essential goals, flat and true would be high on the list. But how do you check a board, panel, or assembly for racking or twist? The easiest, most reliable, and traditional way is to use a set of winding sticks.

Winding sticks are simply two matching strips of wood with straight, parallel edges. Contrasting inlay on the top edge or corners of one stick is often a feature, as seen on the shop-made set in the photo at right. When you position the sticks parallel with one another on a suspect assembly and sight across the edges, the alignment between the two sticks will tell you if it's twisted or not.

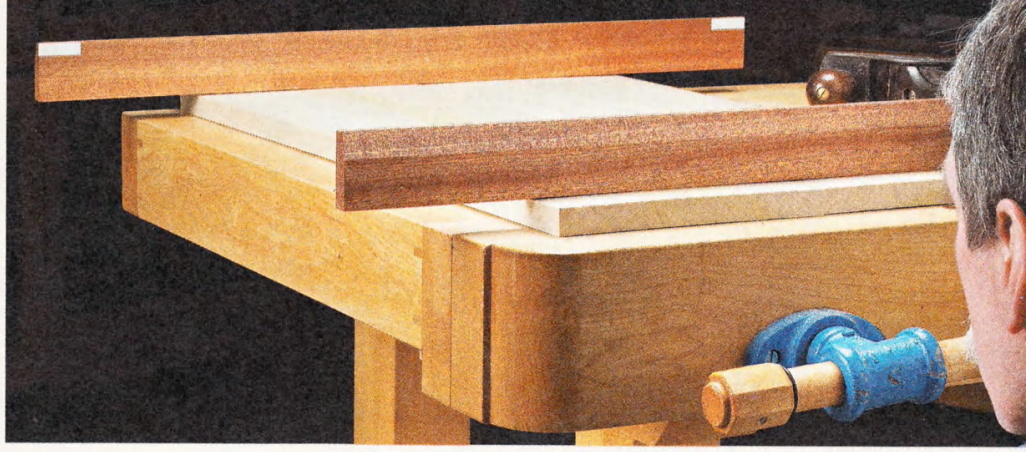

▲ The light-colored inlays on the rear stick make it easy to see any misalignment between the two.

5 Awl

I can't imagine a tool any simpler than an awl — just a pointed shaft mounted in a handle. But on the other hand, I don't know how I'd get along without one.

In my woodworking shop, the awl is an essential marking and layout tool. Whenever I have a hole to drill either by hand or on the drill press, I like to mark the centerpoint with a dimple from the awl. This way, there's no guesswork involved when positioning the drill bit, and the holes always end up in the right place.

▲ An awl has a simple but essential job — marking the centerpoint of a hole to ensure accurate placement.

6 Crosscut Hand Saw

I certainly wouldn't want to cut stock to rough size by hand all the time. But on the occasions when it's necessary, I'm glad to have a sharp crosscut saw hanging in the shop.

The advantages to a hand saw are several: You don't have to plug it in, it's very portable, and it's actually pretty fast. I can have a board cut before the circular saw would even be out of the cabinet. You may even find yourself using it for rough joinery now and then.

◄ Sometimes it's quicker and just more convenient to pick up a hand saw.

7 Push Drill

Have you ever forgotten to drill a hole for a screw, or had to mount hardware on a project and realized there's no way to get a cordless drill into the confined space? In either case, a slim push drill might be your salvation.

As the name suggests, a push drill makes a hole with a reciprocating action by simply pushing it against the wood. The spring-loaded shaft telescopes in and out, creating a hole without much effort and surprisingly fast.

The drill comes with dedicated bits in a range of sizes. You'll find that the light weight and ease of use will have you reaching for your push drill even when it's not a necessity.

All of these classic tools can still be purchased new, or, like me, you can search out "old-timers" that have already been broken in. You'll find a few sources listed on page 51. W

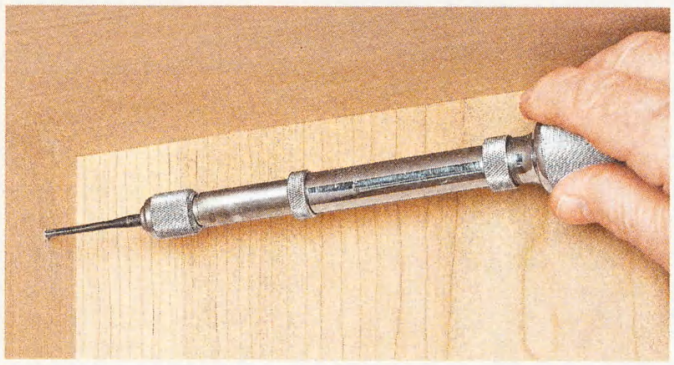

▲ The slim profile of a push drill allows you to drill a small hole where a large drill would never fit. It also works great for hardware installations and other light drilling tasks.

Rockler's State Park Signmaking Kit

Customize your work and have a little fun with your router by trying out a signmaking kit. Here's an up-close look at the newest option.

▲ The *State Park Signmaking Template Kit* from *Rockler* comes with several templates and a guide bushing for $50 (see Sources, page 51).

Few woodworking tools are as versatile as the router. And one enjoyable way to make use of a router's unique abilities is with a signmaking template kit. These kits transform a plunge router into the perfect tool for crafting signs in wood. You can make everything from address signs to shop signs to signs for a kid's playhouse — the sky's the limit.

A NEW KIT. *Rockler*'s newest offering in this category is the *State Park Signmaking Template Kit*, which features character templates that are designed to look like the signs commonly seen at state and national parks.

In many ways, this kit is similar to signmaking kits available from other manufacturers. It features a large number of hard plastic templates for different letters, numbers, and common punctuation marks (photo at left).

When you're using the *Rockler* kit, the templates actually lock together like puzzle pieces. First, you put the templates in the desired order. Then you secure them to the wood with tape. At this point, you can begin routing

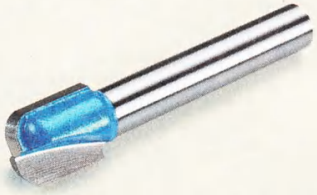

▲ This signmaking router bit (also from *Rockler*) is sold separately from the kit.

your sign using a plunge router equipped with a guide bushing and a special "signmaking" bit. The bit is similar to a core box bit, but with a slightly flatter cutting end (lower right photo on the facing page).

UNIQUE KIT FEATURES. While *Rockler*'s new kit does share some similarities with its competitors, it also has a few unique differences that are worth pointing out.

For example, letters with an open space in the center like "O," "D," and "P" have always presented a challenge in these signmaking kits. Simply put, there's no ideal way to create this opening with a router template.

Some kits have overcome this issue by creating a "bridge" in the template that creates a gap in the shape of the letter. And with other kits, these letters can only be made by keeping your router tight against the outside of the template.

▲ This kit solves the problem of letters with openings in the center (like "O" and "P") by having you rout them in two parts.

▲ After the first routing pass, insert the templates marked with a "2" and repeat the process.

The new *Rockler* kit solves the problem in a different way: Some letters and numbers are made in two parts. It sounds complicated, but it's not. You just put the first part of the letter in your word template (for example, O-1 and P-1, as shown above), and rout it. Then, replace it with the second part (O-2 and P-2) to complete the letter. The look you get is seamless.

SOLVING SPACING PROBLEMS. Also, some other kits leave you with inconsistent gaps between letters. This is difficult to avoid, as some letters are just naturally positioned more closely to other letters when you type or write them out.

The new *Rockler* kit addresses this issue by including a series of kerning spacers. To use them, you replace a letter with the kerning spacer, and make a routing pass (see the upper photo on the left). Then you replace the kerning spacer with the missing letter and rout it to make the letters line up properly (lower photo and inset photo at left).

The manual gives you specific instructions on when to use the spacers. *Rockler* also has a "Signmaking Wizard" on their website that will provide you with a complete, step-by-step guide to routing your specific sign.

▲ To deal with awkward spacing issues, the kit includes "kerning spacers" that you use with certain letters.

WORKING WITH THE KIT. I found the signmaking kit to be very simple to set up and use. Plus, it was a unique departure from my typical woodworking router operations. I began online by typing my sign into the "Signmaking Wizard," and then I got started putting all the templates together like puzzle pieces. The lock between the templates is strong enough that it's easy to move them around and get them positioned properly on the workpiece before securing them with strips of painter's tape.

The routing process itself was also kind of fun. After outfitting my plunge router with the bit and bushing, I set the router's depth of cut at about ¼". Then I just worked my way across the template by routing one letter at a time. This involved plunging the bit into each opening, routing the outline, and lifting the router before moving on to the next.

FINISHING OPTIONS. After a good sanding, you have several options for finishing your new sign. One cool way to make the sign really pop is to spray-paint the letters, and then sand the surface after the paint dries to remove any excess. Finally, top-coat the whole thing to complete your personalized routed wood sign. W

quick & easy

Sandpaper Sharpening

Woodsmith GO ONLINE EXTRAS

For details on making your own sharpening platform, visit our website at Woodsmith.com.

You don't have to spend a fortune on fancy equipment to get a razor-sharp edge on your tools. Simple sandpaper can do the job.

Keeping a sharp edge on your chisels, knives, and plane irons is a crucial step in successful hand-tool work. A dull edge simply won't perform well and will often lead to pushing harder on the tool or forcing a cut. This, in turn, can lead to accidents. In these situations, a dull blade is far more dangerous than a sharp one.

So it's important to develop a system for sharpening your tools that's reliable and doesn't take away too much time from your woodworking.

THE OPTIONS. Every sharpening method begins with an abrasive that's hard enough to scratch tool steel. And to refine an edge, the process requires you to work through several different grits of abrasive. There are lots of options: waterstones, oilstones, diamond plates, and different types of bench grinders. But I've found that using wet/dry sandpaper fixed to a piece of glass not only produces great results, but is quick and easy, as well.

WHY SANDPAPER? If you're new to sharpening, this method is the perfect starting point. What makes it such a great choice is that unlike other options, there's no need for a large outlay of cash to get started.

Sandpaper comes in a range of grits that can take your tools all the way to a surgically sharp edge. And it's available everywhere. However, the type of paper you choose makes a difference.

You can use standard aluminum oxide paper for grits up to 220, but a better choice for the real polishing work is wet/dry silicon-carbide paper (margin photo). Another option is shown in the box on the opposite page.

The next thing you need is a flat surface, like a piece of plate glass. The main photo above shows my solution. I mounted the glass on a plywood platform. Two rabbeted cleats hold the glass in place. (See our Online Extra for the plans.)

You can cut the sandpaper sheets in half and attach them to the glass with spray adhesive. But go easy on the adhesive. All it takes is a light spray to hold the paper. If you use too much you'll end up with lumps under the paper which may cause it to tear on the first pass of a sharp blade.

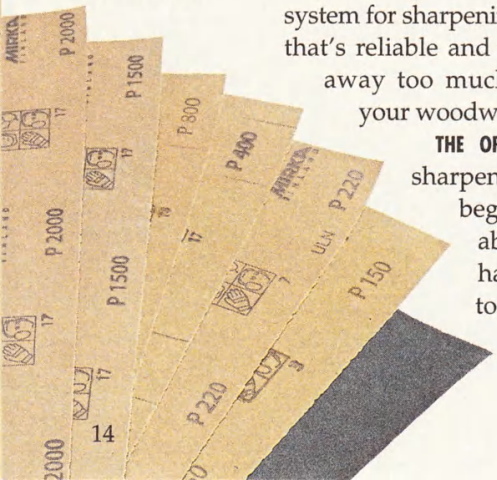

Silicon-carbide sandpaper is inexpensive and available at most auto parts stores.

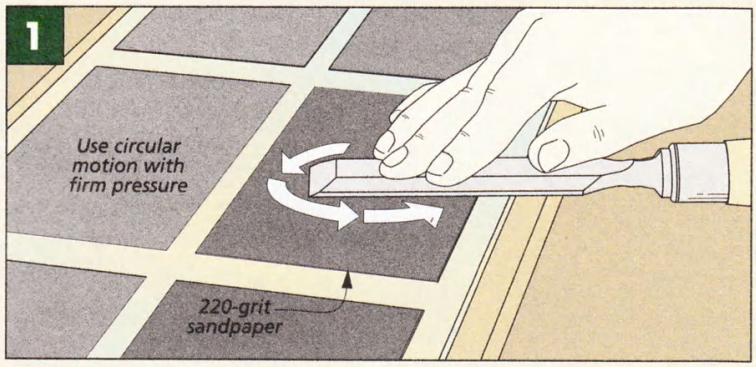

Flatten the Back. *Hold the face of the tool flat on the sandpaper and move it in a circular motion to flatten the back. When you have an even scratch pattern on the surface, move to the next grit.*

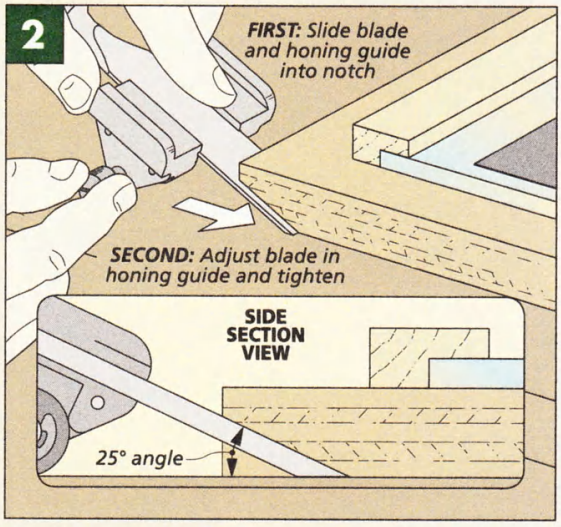

Set Up the Guide. *To set up the tool in the honing guide, use the notches on the platform to establish the correct angle. Then tighten the guide to hold the tool.*

The system shown holds six different grits. I use 150, 220, 400, 800, 1500, and 2000. If you have a tool with a damaged edge, however, like the top one in the right margin photo, you'll need to start with a coarser grit to re-establish the bevel on the edge. I add a splash of water to help remove the swarf and keep the paper clean.

SHARPENING TECHNIQUE. Once you've put together your sanding platform, the sharpening technique is pretty straightforward.

The goal in any sharpening method is to form two flat, intersecting planes. So the first step is to flatten the back face of the tool. Figure 1 above shows this step. When you have an even scratch pattern on the back, move to the next grit. Continue through the grits until you have a polished back face. At the 2000-grit stage, it should shine like a mirror.

HONING GUIDE. Now you're ready to sharpen the bevel. I like to use a honing guide. The guide holds the tool at the proper angle so you can sharpen the bevel. You can see a honing guide in action in the main photo on the opposite page.

Before you can start honing the bevel, you need to set the angle in the guide. For most woodworking tools this angle is in the 25° to 35° range. I made notches on the sharpening platform to make setting up either a 25° or 30° angle a little easier. As you can see in figure 2 above, all you need to do is place the blade in the notch and lock it in position in the guide.

Work through the grits as before. After that, another light pass on the back to remove the fine wire burr might be needed. At that point, the tool is ready to use.

TOUCH UP. You won't need to use all the grits for every sharpening session. As you gain experience, you'll learn when the tool needs a "touch up" and you can then move right to the appropriate grit. Also, it's not necessary to go all the way to 2000-grit with every tool. Most will be plenty sharp at 1000 or 1500.

All in all, it's tough to beat the results from this method of sharpening. And since it doesn't require a major investment, there's no need to compromise your woodworking with a dull tool. W

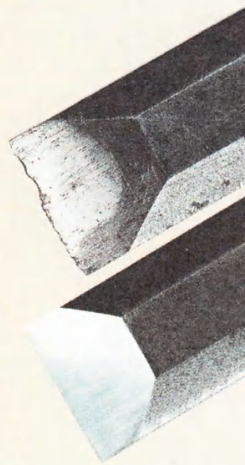

▲ By working through the grits, you can repair and sharpen the edge of any tool.

Worth a Look: 3M Microfinishing Film

I've used the gray, wet-dry sandpaper for years with great results. But it does have one weakness — it tears easily, especially when you use water to lubricate it. Recently, I found another type of abrasive that I like even better — it has a plastic film backing.

The product is *3M's 372L Microfinishing Film* shown in the photo at right. These flexible sheets employ uniformly sized particles of aluminum oxide, bonded to a polyester film. The film is very thin (5 mil), but really tough. It ended my tearing problems. It's a little more expensive, but well worth it. (See Sources on page 51.)

The advantage comes from the fact that this film abrasive was developed specifically for working metal. It's designed for use in industrial applications like smoothing crankshafts and bearing surfaces. So polishing up your tool steel is no challenge at all. It also means this product outlasts most other abrasives.

▼ *Microfinishing Film* from *3M* is color-coded for easy identification of the grits.

modular Shelving System

Turn some heads with this contemporary shelving unit. Its unique, knock-down design is great for displaying plants and so much more.

Open shelving is a welcome addition to almost any room in your home. But few shelves are stylish or versatile enough to fill everybody's needs.

That's where this modular shelving system comes in. It's made up of individual components that go together with knock-down hardware. As a result, you can build just the sections you need: The straight center shelves, the curved corner shelves, or the whole thing. The shelves can support books, plants, or any other items that you'd like to put on display.

START WITH THE FRAMES. The heart of this shelving system is the "stair-step" frames that support the shelves. If you build the whole system as it's shown here, there

are four frames total: Two inner frames that support the center shelves, and two outer frames that rest flat against the wall to support the corner shelves. All four of the frames are identical.

BUILDING THE FRAMES. Each hardwood frame consists of a top rail, a bottom rail, a back stile, and three overlapping front stiles. You can see the locations and dimensions for all these parts in the illustration at right.

The back stile is the easiest part to make: You just cut it to size. The top and bottom rails each have a 90° cut on the back end and an 85° cut on the front end. After ripping the parts to width, angle the miter gauge 5° and make the cut. Then save the waste pieces. (I'll explain why later.)

LAYOUT GAUGE. The three front stiles are a little trickier to cut to length. That's because each one has an 85° angled cut on both ends. To help in making the stiles, I devised a simple layout gauge. It's nothing more than a tapered board with layout lines for all three sizes of stiles (see detail 'a' at right).

To use it, first cut one end of each stile at 85°. Set it on the layout gauge and transfer the appropriate line for that stile onto the board (see the lower left drawing). Now you can head to the table saw to cut it to final length (lower middle drawing). Use a stop block on an auxiliary miter gauge fence for consistent lengths.

COMPLETE STILES. The last detail on each of the stiles is a subtle curve cut at each end. Lay this detail out on each board with a compass and cut it as shown in the lower right drawing.

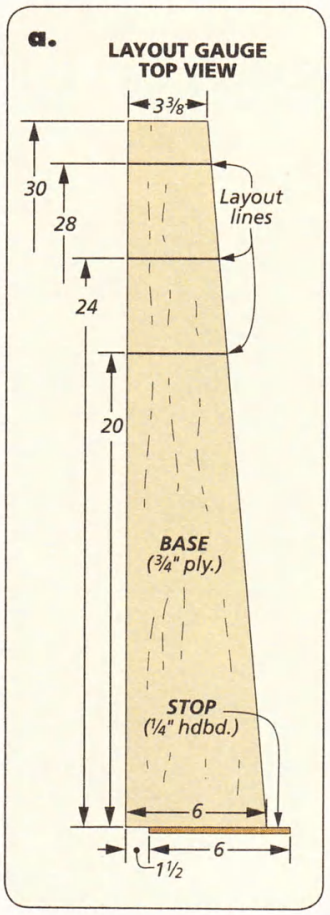

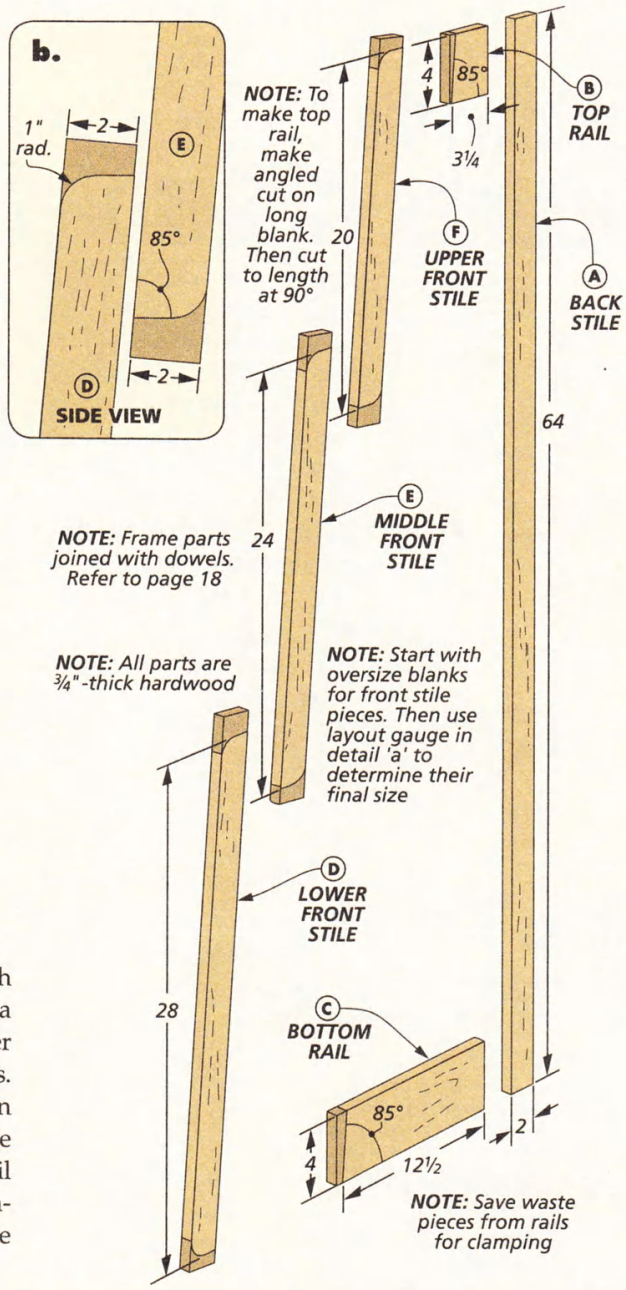

How-To: Cut the Frame Components

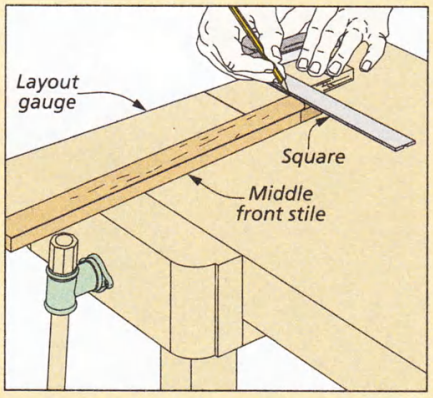

Gauge. *Miter one end of each stile piece at 85°. Set it on the gauge, and strike a line across it for cutting it to length.*

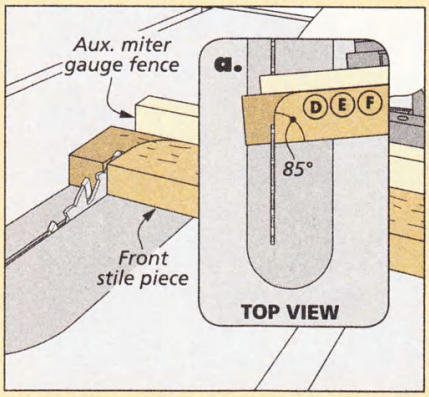

Miter. *Angle the miter gauge to 85°, align the layout line with the saw blade, and cut each stile piece to final length.*

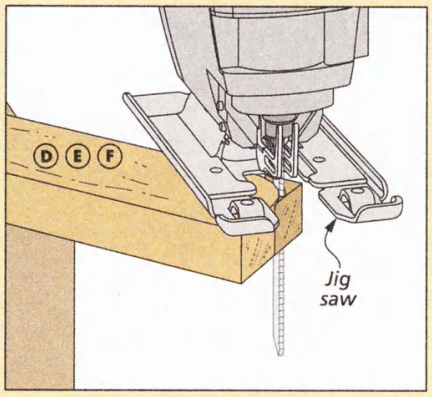

Rounded Corners. *The rounded corners on the ends of the stiles are easy to cut using a jig saw. Sand the cut smooth.*

building the FRAMES & SHELVES

After shaping all the frame parts, it's almost time to put them together. But first you need to do a bit of work on the joinery.

DOWEL JOINTS. The frames are assembled with glue and dowels. This requires drilling holes for dowels at the joints where the frame parts intersect. The dowel holes at the back of each frame are drilled at 90°. But the holes for the front parts of the frame are drilled at 85° to match the angle of the pieces.

This can get a little tricky, so to solve the problem, I made a doweling jig that can drill holes at both 90° and 85°. You can see how to build the jig on page 33.

Once complete, you position the jig on the frame parts and drill the holes for the dowels. The sequence of illustrations below gives you a good overview.

All that's left is to use dowels, some glue, and clamps to assemble the frames. You will find a simple tip for making the glueup easier in the illustration shown at left.

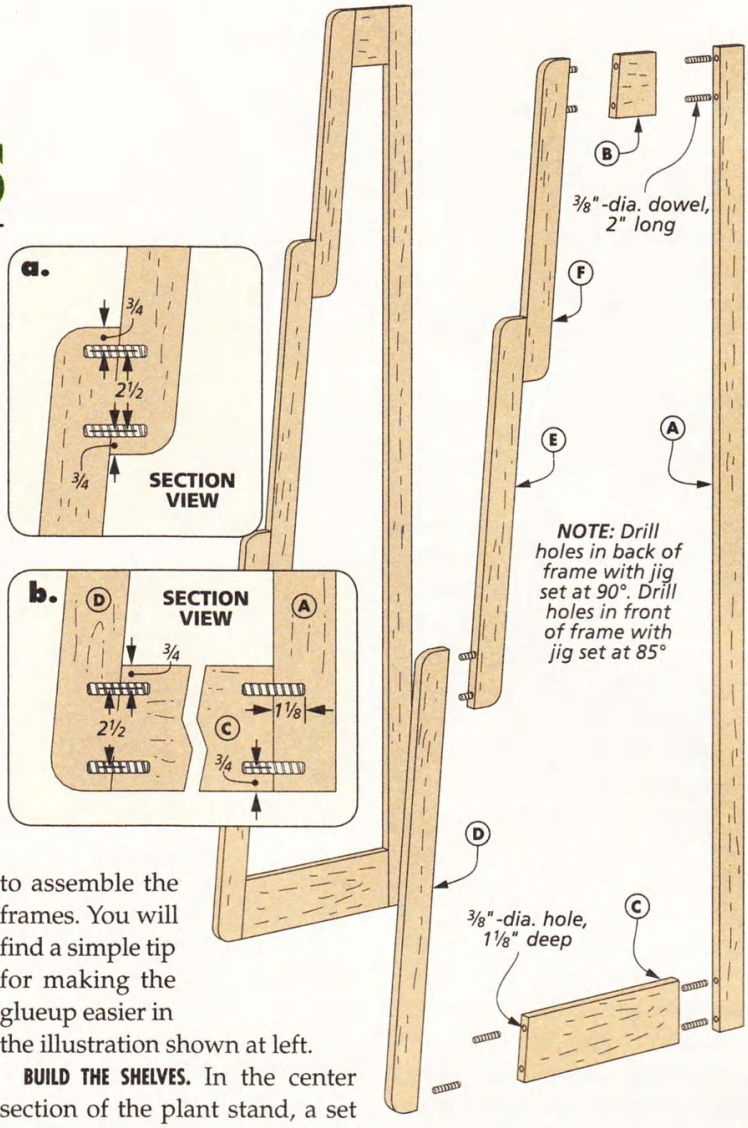

BUILD THE SHELVES. In the center section of the plant stand, a set of long shelves spans the gap between the two frames. Each shelf has a few parts attached underneath it. A pair of rails near each end secure the shelf to the frame. And to add stability to the shelf, a shelf frame gets screwed to its underside. The shelf frame is made up of a front, back, and two ends.

Keep in mind that there are four shelves, and each shelf, as well as all its components, are

Shop Tip: Wedges

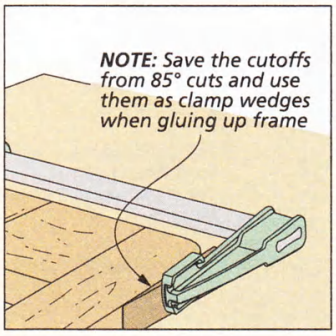

How-To: Use the Doweling Jig

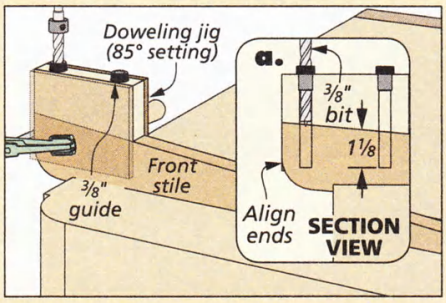

Front Edge Dowels. *Align the doweling jig with the ends of the front stile pieces as shown, and drill the holes for dowels.*

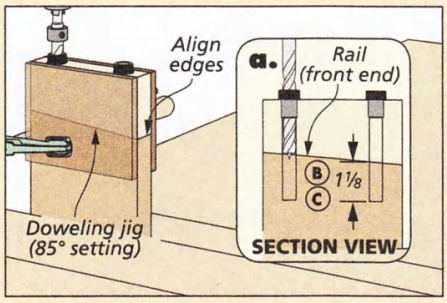

Front End Dowels. *To make the mating holes in the front ends of the rails, simply align the jig with the rail edges and drill.*

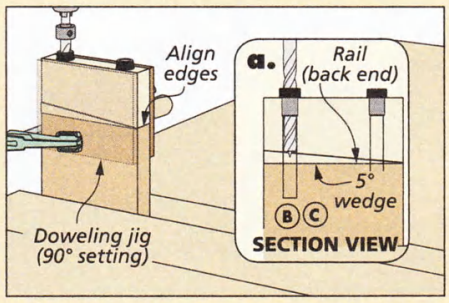

Back Dowels. *All the holes at the back of the frame are drilled at 90°. Add a 5° wedge to the jig before drilling these holes.*

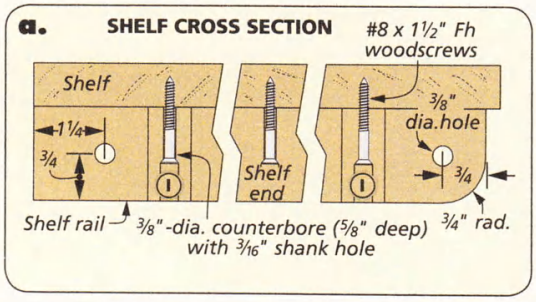

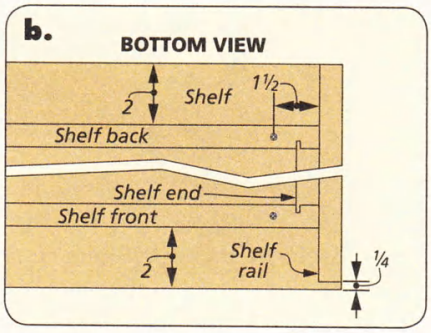

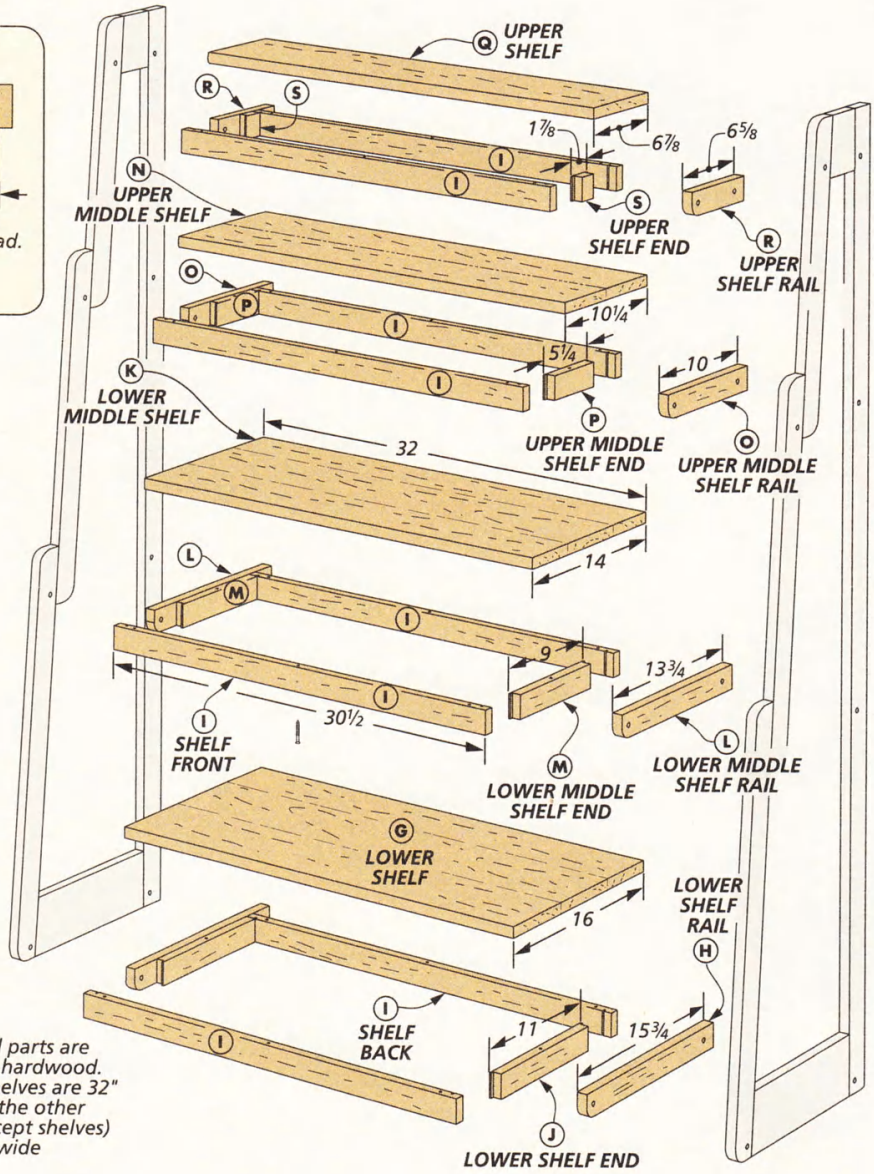

NOTE: *All parts are ¾"-thick hardwood. All the shelves are 32" long. All the other parts (except shelves) are 1⅝" wide*

different sizes. So it's a good idea to label all the parts carefully as you begin cutting them to size.

Since they're relatively wide, the lower three shelves are glued up out of narrower boards. After the glueups dry, cut all four shelf panels to final size.

Cutting the shelf rails to size is the next order of business. Drill pilot holes for fasteners and round over the front end of each with a jig saw (detail 'a').

Now you're ready for the shelf frame parts (the front, back, and ends). After sizing them, you'll cut a dado in the fronts and backs, and a mating tongue on the shelf ends (left and middle drawings below).

Assembly of the frames comes next. You can glue the rails onto the ends of each frame, as shown in the detail 'b' above. Now finish up each shelf assembly by fastening the frame to the underside of each shelf with woodscrews, as shown in detail 'a' above.

With the shelves assembled, you can use them as guides for drilling pilot holes for connecting them to the frames. The lower right drawing gives you a good guide for how to do this.

Shelf Joinery & Assembly

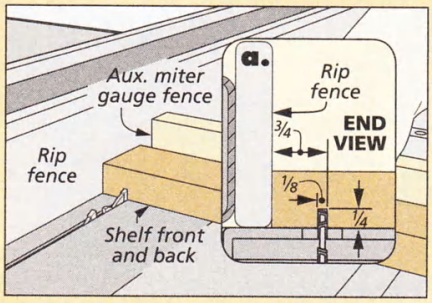

Dado. *The shelf front and back receive a narrow dado near each end to accept a tongue on the shelf ends.*

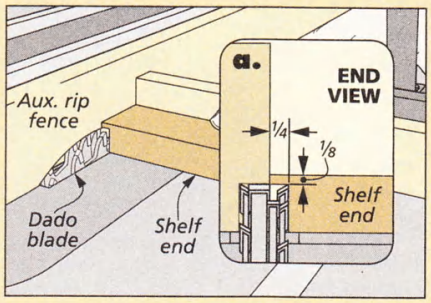

Tongue. *To cut the mating tongue, partially bury a dado blade in an auxiliary wood rip fence before making the cut.*

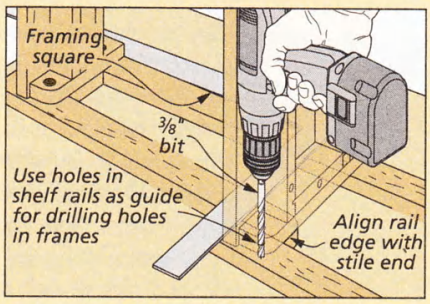

Drilling Guide. *Once the shelves are assembled, the shelf rails make perfect guides for drilling holes in the frames.*

adding the CORNER SHELVES

The corners of the shelving system are built similarly to the center unit. They have shelves that get gradually smaller from bottom to top. And a pair of rails fastened to each shelf are used to attach the shelves to the frames.

The difference is that while the center shelves are rectangular, the corner shelves have a curved edge, as you can see at right. In fact, each corner shelf is a perfect quarter-circle in shape.

MAKE THE SHELVES. Here again, you'll want to start on the corner shelves by gluing up boards to make the three lower shelves. Now cut each shelf to length and width, and lay out the arc, as indicated in the illustration at right. The band saw makes quick work of these arcs (see the lower left drawing).

The two end rails are the next order of business. After cutting them, drill pilot holes for fasteners, and round the front corner at the band saw. Then miter the ends of the rails where they come together, and attach them to the underside of each corner shelf, as shown in the lower right drawing.

FINISH. At this point, the components of the shelving system are ready for paint and finish. After applying the paint, I sanded some of the edges to create a unique "distressed" look. Then I added stain and a topcoat. You can find information about the specific finishing products and techniques that I used on page 51.

FINAL ASSEMBLY. The assembly of the shelving system is accomplished with knock-down hardware. This speeds assembly and makes it easier to move and set up the stand. I used two types of quick-connect bolts — shorter ones to connect the corner shelves to the outer frames,

▲ The system's corner shelving unit is a great-looking project all on its own.

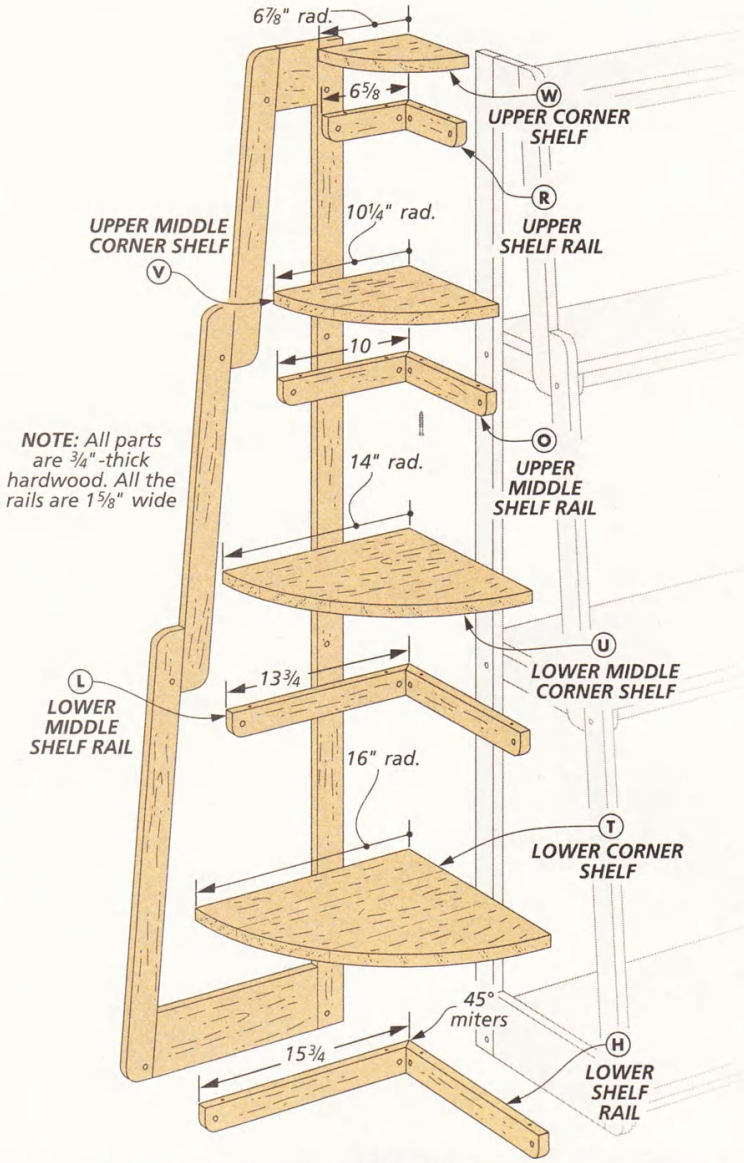

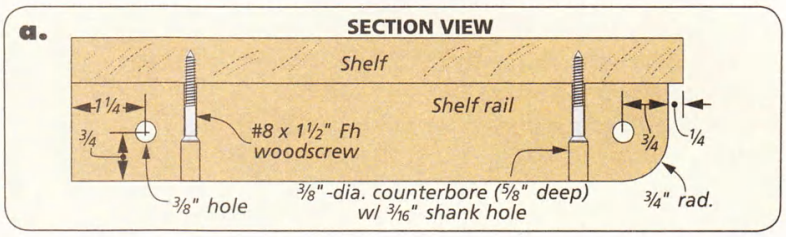

How-To: Curved Shelves

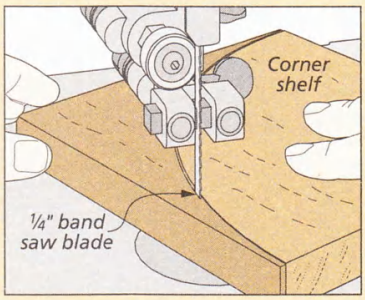

Band Saw Arc. *On each shelf, cut just outside the layout line and sand the edge smooth.*

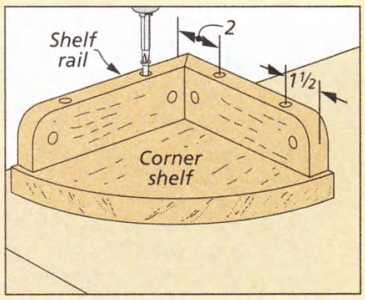

Attach the Rails. *The shelf rails are secured to the corner shelves with woodscrews.*

and longer ones to connect the corner and center shelves to the inner frames (see the main illustration on the right). Each bolt gets secured with a cap, as shown in detail 'a'.

The illustration gives you a good overview of the assembly process. The easiest method for assembling it is to build the shelving system lying on its back on the floor. Start at the bottom, threading the bolts through the holes in the lower shelf rails and the lower portion of the frames. Then secure each bolt with a bolt cap.

Once you have all the lower shelves attached to the frames, you can work your way up toward the top, adding the shelves as you go.

ONE STAND, MANY USES. With the shelving system complete, it's time to move it into position. Then the real fun can begin — finding the perfect plants and other accessories to decorate your shelving unit.

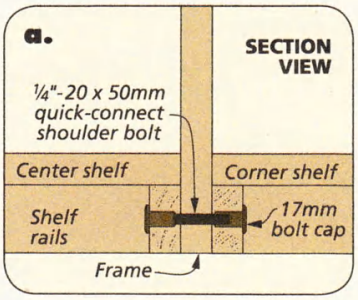

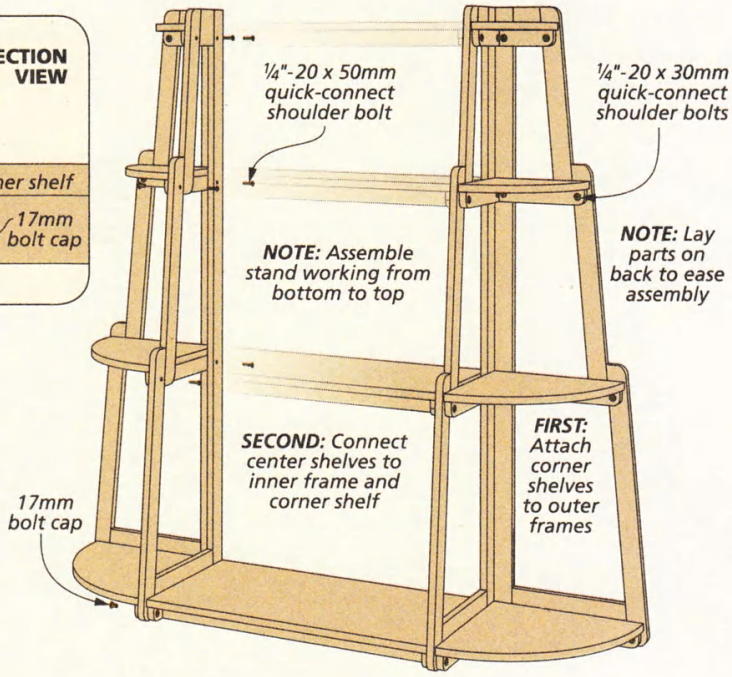

Materials, Supplies, & Cutting Diagram

A	Back Stiles (4)	3/4 x 2 - 64
B	Top Rails (4)	3/4 x 4 - 3 15/64
C	Bottom Rails (4)	3/4 x 4 - 12 1/2
D	Lower Front Stiles (4)	3/4 x 2 - 29 1/2 rgh.
E	Middle Front Stiles (4)	3/4 x 2 - 25 1/2 rgh.
F	Upper Front Stiles (4)	3/4 x 2 - 21 1/2 rgh.
G	Lower Shelf (1)	3/4 x 16 - 32
H	Lower Shelf Rails (6)	3/4 x 1 5/8 - 15 3/4
I	Shelf Fronts/Backs (8)	3/4 x 1 5/8 - 30 1/2
J	Lower Shelf Ends (2)	3/4 x 1 5/8 - 11
K	Lower Middle Shelf (1)	3/4 x 14 - 32
L	Lower Mid. Shelf Rails (6)	3/4 x 1 5/8 - 13 3/4
M	Lower Mid. Shelf Ends (2)	3/4 x 1 5/8 - 9
N	Upper Middle Shelf (1)	3/4 x 10 1/4 - 32
O	Upper Mid. Shelf Rails (6)	3/4 x 1 5/8 - 10
P	Upper Mid. Shelf Ends (2)	3/4 x 1 5/8 - 5 1/4
Q	Upper Shelf (1)	3/4 x 6 7/8 - 32
R	Upper Shelf Rails (6)	3/4 x 1 5/8 - 6 5/8
S	Upper Shelf Ends (2)	3/4 x 1 5/8 - 1 7/8
T	Lower Corner Shelves (2)	3/4 x 16 - 16
U	Lwr. Mid. Corner Shelves (2)	3/4 x 14 - 14
V	Upper Mid. Crnr. Shelves (2)	3/4 x 10 1/4 - 10 1/4
W	Upper Corner Shelves (2)	3/4 x 6 7/8 - 6 7/8

- (48) 3/8"-dia. x 2" Dowels
- (46) #8 x 1 1/2" Fh Woodscrews
- (16) 1/4"-20 x 30mm Bolts
- (16) 1/4"-20 x 50mm Bolts
- (32) 17mm Bolt Caps
- (2) 3/8"-dia. Bushings (for doweling jig)
- (2) Inserts (for doweling jig)

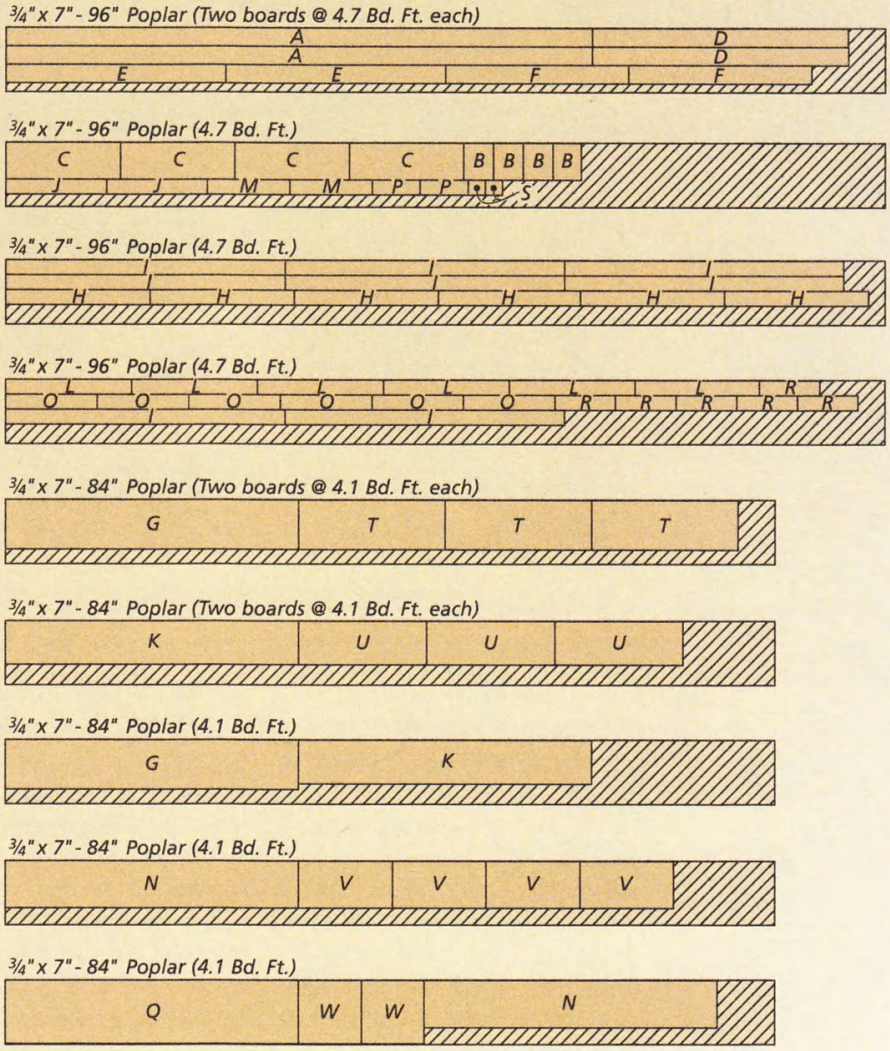

bedroom suite Oak Dresser

Despite all the attractive detail, this roomy chest of drawers will go together with an absolute minimum of fuss.

The beautifully detailed dresser pictured above is the first installment on a suite of bedroom furniture that's guaranteed to be as practical as it is attractive. But before you jump to conclusions about the construction of this project, let me offer a word of encouragement. Despite the appearance of complexity, you'll find that all the work is very straightforward and easy to manage.

I'll let you in on the secret. From the outside, you see an attractive case that appears to be put together with time-consuming frame and panel construction. However, hidden beneath the solid-wood framing and eye-catching moldings is a simple, easy-to-assemble plywood case. This solid assembly forms the shell upon which all the window dressing is applied.

Almost sounds like cheating, doesn't it? But I say, all's fair in love, war, and woodworking.

And if you think the chest of drawers is an interesting project, why stop there? In coming issues we'll feature plans for a matching wall mirror, nightstand, and queen-size bed frame (photo at right). That should be enough to fill your woodworking calender for a good long while.

CONSTRUCTION DETAILS

OVERALL DIMENSIONS:
19¾"D x 42"W x 47¾"H

Plywood top panel wrapped with solid-wood edging

¼" plywood back

NOTE: Case constructed with simple dado and rabbet joints

Kicker glued to back of drawer

Drawers slide on rabbeted wood guides

Divider edging

Plywood drawer fronts wrapped with solid-wood molding

NOTE: Drawers are assembled with sliding dovetail joints

Trim pieces create visual divide between upper and lower sections of case

NOTE: Solid-wood framing and decorative moldings applied over easy-to-build plywood case

NOTE: Mitered base built separately and then attached to case with screws

Base brace

Cleats reinforce base

Traditional segmented glue blocks reinforce mitered corners of base

NOTE: For sources of supplies and finishing information, see page 51

Rabbeted molding hides plywood edges

Plywood drawer front

Case edging

Drawer stop

SIDE SECTION VIEW

FRONT SECTION VIEW

Drawer guide

Base brace

Base cleat

NOTE: Base is assembled separately and then attached to case

▲ The dresser is just one part of a complete suite of bedroom furniture. Upcoming issues will feature plans for the mirror, nightstand, and bed frame.

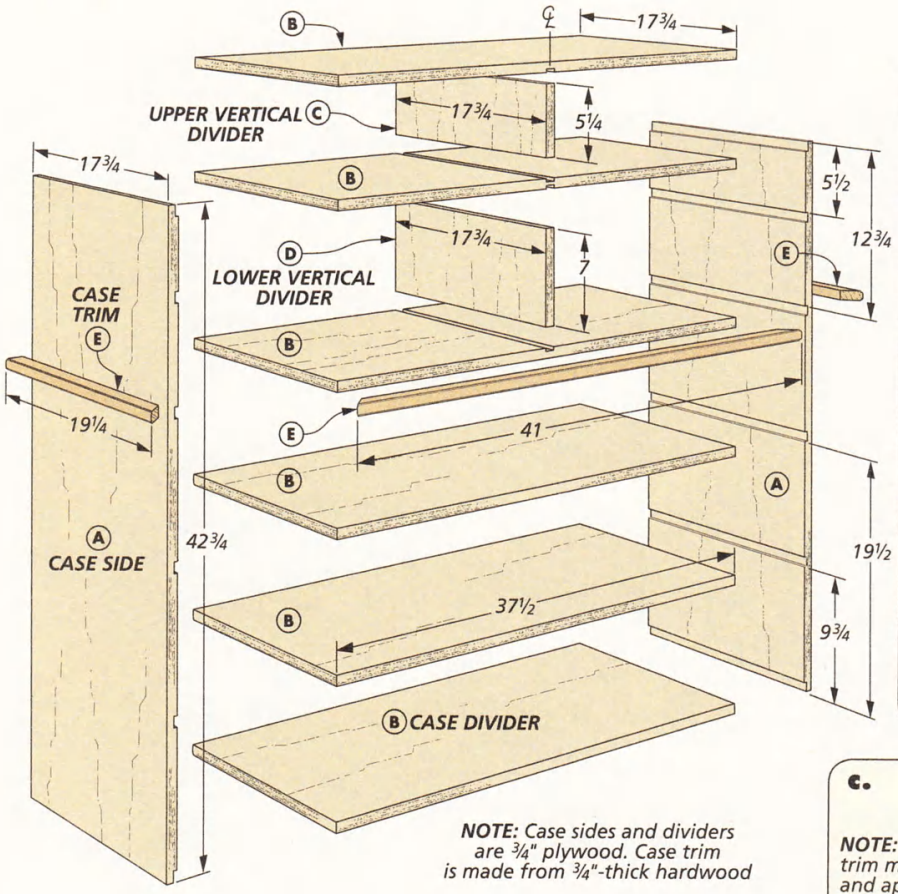

NOTE: Case sides and dividers are ¾" plywood. Case trim is made from ¾"-thick hardwood

NOTE: Trim is installed after case is assembled

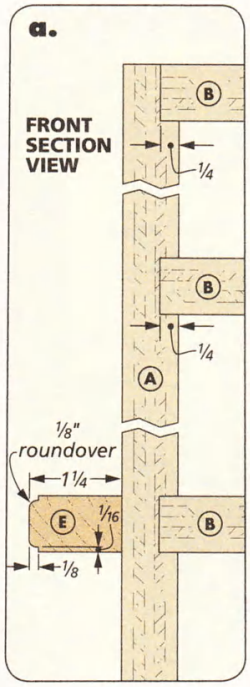

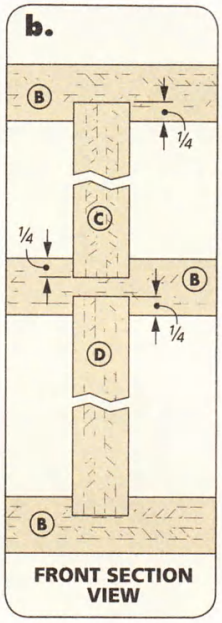

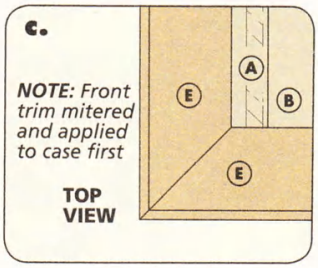

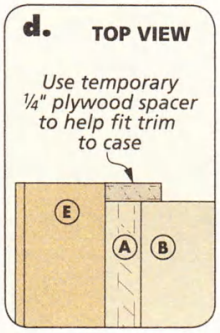

start with the PLYWOOD CASE

I think you can guess what the first steps involve. You'll assemble the ¾" plywood case that forms the foundation of the chest. The case is divided for seven drawers — three large drawers below and two pairs of smaller drawers above. However, simple dado and rabbet joints make it easy to build.

CASE PARTS. The case is made up of two side panels, six identical horizontal dividers, and two short vertical dividers. (You'll add a ¼" plywood back later). Cutting theses parts to accurate and consistent size is the key to getting off on the right foot. Ripping the panels to width is relatively easy. But crosscutting them to length is a different matter. My answer is the crosscut sled shown in the Shop Tip below.

I cut the vertical dividers to width at this point, but left them extra long. You can cut them for a custom fit after all the dado joinery is completed.

DADOES & RABBETS. Now it's time to install a dado blade in the table saw. To ensure snug joints and a strong, rigid case, take a little time to size the blade to the plywood you're using.

The How-To box on the opposite page shows the next steps. Each side panel needs four dadoes through the middle and a rabbet at each end. I started with the rabbets. To make these cuts, you'll have to install an auxiliary rip fence and position it at the very edge of the dado blade. Rabbet both ends of each panel.

Shop Tip: Crosscut Sled

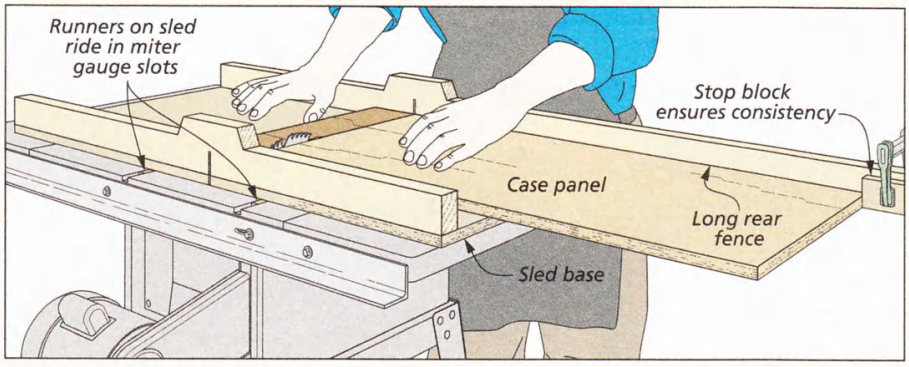

Better Control. *A crosscut sled guided by runners in the miter gauge slots makes cutting large, awkward panels to length much easier. You can guarantee that the case sides and dividers are sized consistently by attaching a stop block to the rear fence.*

Once the rabbets are completed, you can remove the auxiliary fence and cut the dadoes. First, I cut the lower two sets of dadoes referencing the bottom of the sides against the fence. Then I flipped the panels end-for-end to cut the remaining two sets. Take care to get the spacing right. The three lower openings should be identical in height.

VERTICAL DIVIDER DADOES. The vertical dividers are captured in centered dadoes cut into the top three case dividers. I'll call them dividers one, two, and three. Dividers one and three have a dado on one face, divider two has a dado on both faces (detail 'b,' opposite page).

Again, you want to set the rip fence carefully so the dadoes end up centered in the panels. And to ensure the dadoes align, cut them with the same edges (left or right) against the fence. Once these dadoes were cut, I dry assembled the case, measured for the vertical dividers, and cut them to length.

CASE ASSEMBLY. It works best to assemble the case in stages. I started by gluing all the dividers into one side, using the opposite side to keep things square. Next, I glued on the second side. Finally, I added glue to the centered dadoes and slid the vertical dividers into place. The middle drawings at right show how to clamp up the case at each step.

CASE TRIM. With the basic case assembled, you can begin adding the pieces that give it character. First up is a band of trim that wraps three sides of the case and is applied flush with divider three (detail 'a,' opposite page). The pieces feature a 1/8" roundover with a fillet on both outside edges and are mitered at the front corners (detail 'c,' opposite page).

Take a look at the two lower drawings at right for details on making and installing the case trim. Note the temporary 1/4" plywood spacers I tacked along the back edge of the case to help with fitting the side pieces.

How-To: Case Construction

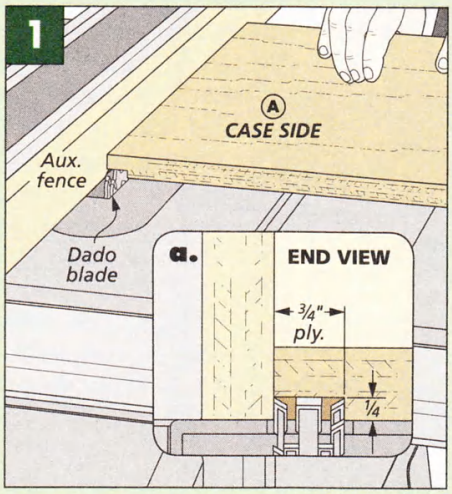

Rabbets. *An auxiliary rip fence positioned at the edge of the dado blade allows you to cut rabbets that match its width.*

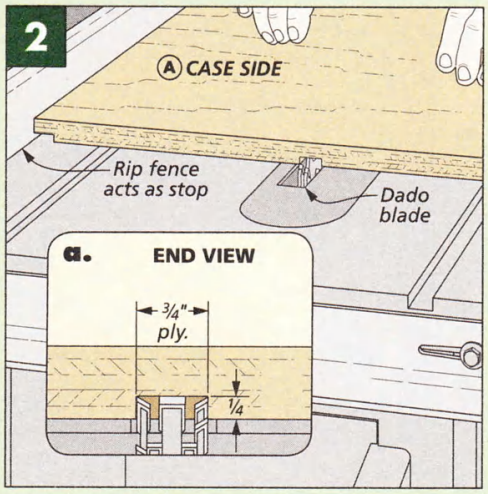

Dadoes. *Cut each pair of dadoes with the same rip fence setting. Make sure they're precisely located and cut to full depth.*

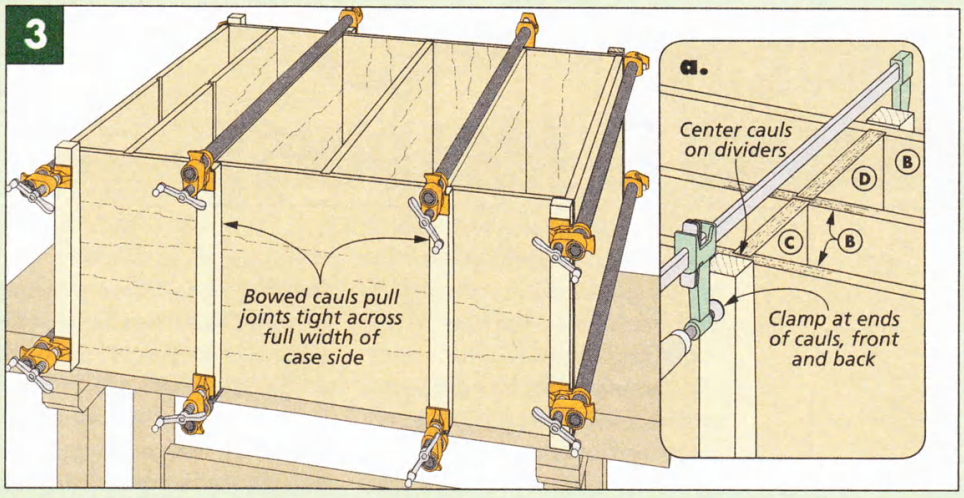

Clamping Helpers. *The key to a tight case assembly is firm clamping pressure along the entire length of the joints. A good way to achieve this is to use stiff cauls that have a slight bow planed into them. This trick will work for both the horizontal and vertical dividers.*

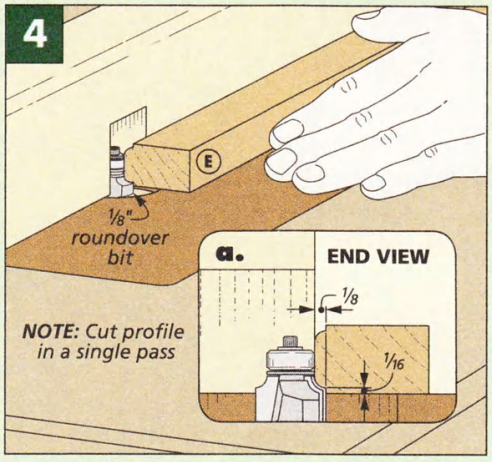

A Simple Profile. *After cutting extra-long blanks to final width, I routed a 1/8" roundover with a 1/16" fillet on both outside edges.*

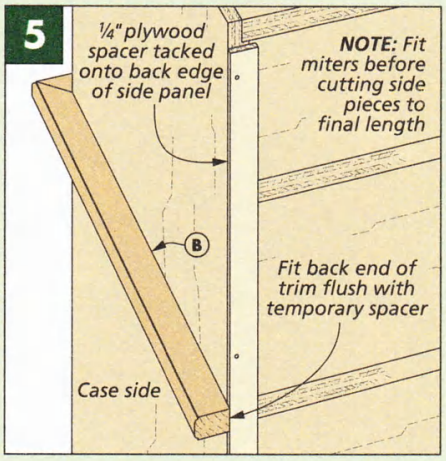

Temporary Spacers. *I added a pair of 1/4" plywood strips to double for the case back when installing the side trim pieces.*

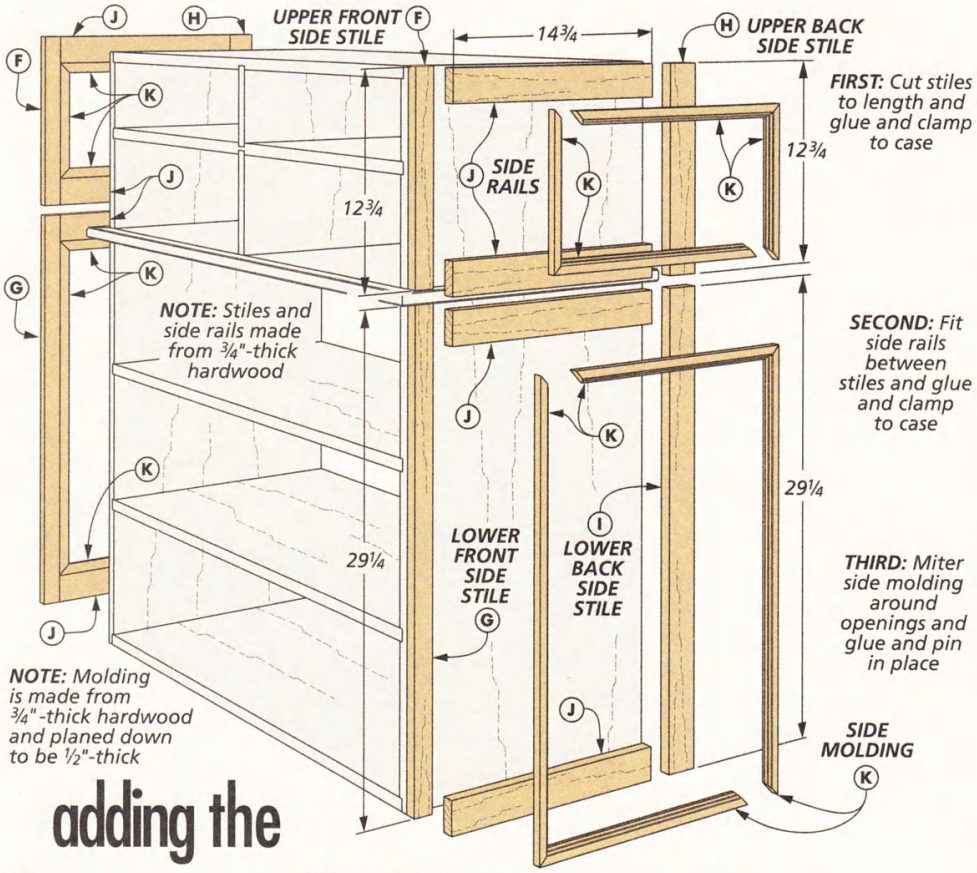

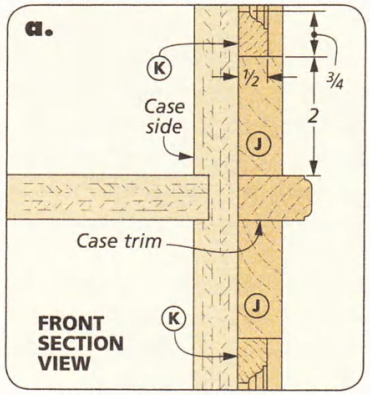

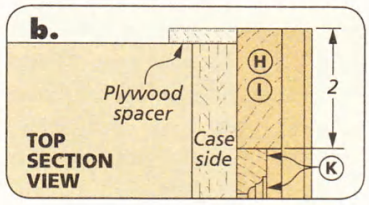

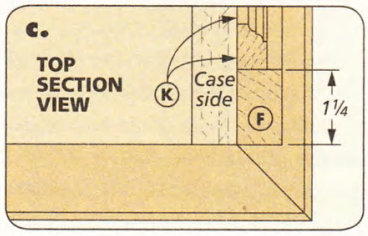

adding the FRAMES & MOLDINGS

With the case assembled and the trim in place, your next step is to add the side framing and molding, followed by the front framing. As seen in the drawing above, each side has an upper and lower frame consisting of two stiles and two rails. Simple butt joints make this work pretty straightforward.

All the side framing is cut from ¾"-thick stock, and with the exception of the narrower front side stiles, the pieces are the same width. These stiles will be "beefed up" by adding the front stiles.

FIT & GLUE. After cutting the framing pieces to width and rough length, I began cutting them to fit the case sides. Each of the four frames is installed the same way. First, I cut the front and back stiles to length. You want them to fit snug to the case trim and flush with the upper or lower edge of the case. Once the stiles are cut to length, they can be glued and clamped to the case sides flush with the front edge or the back spacer, as illustrated in the

How-To: Install the Frames

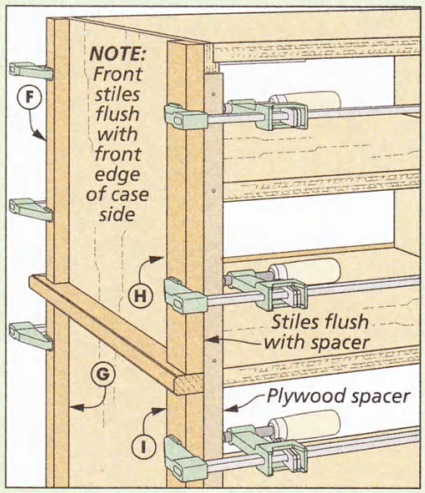

Side Stiles. *It's easy to glue the side stiles by clamping across the sides. The back stiles are flush with the spacer.*

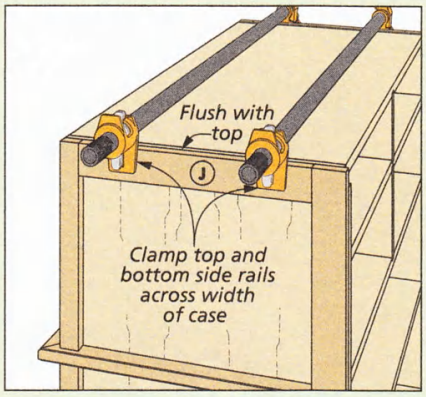

A Long Span. *A set of long clamps solves the problem of clamping the top and bottom rails while the glue dries.*

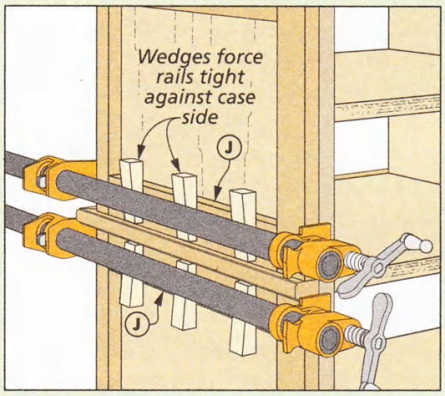

Middle Rails. *I applied clamping pressure to the middle rails by inserting wedges between a clamp and the rails.*

How-To box and details 'b' and 'c' on the opposite page.

While the glue holding the stiles is drying, you can cut the rails to fit between them. There are four rails on each side — one at the top, one at the bottom, and one on each side of the case trim (detail 'a,' opposite page).

Gluing and clamping the top and bottom rails isn't difficult. All it takes is a few long clamps, as shown in the How-To box on the opposite page. This won't work for the middle rails, though. So here, I relied on the simple but effective clamping trick also illustrated on the previous page.

SIDE MOLDING. Making and installing the molding that wraps the frame openings will complete the frame and panel effect on the case sides. This ½"-thick molding features a classic cove and bead profile. The good news is that it can be routed with a single bit.

First, you'll need to plane some stock down to ½" thick. Then rip the boards into 2"-wide blanks. Each of the blanks will make two pieces of molding.

Your next stop is at the router table where you'll rout the profile on both edges of the blanks (How-To below). Multiple passes will give you the smoothest result.

Now it's back to the table saw to rip the molding free from the blanks, as shown below. I cut the pieces to final width between the blade and fence using a notched push block.

MITERS. With the molding ready to go, you can start cutting miters (main drawing, opposite page). I worked around each opening, gluing and pinning the pieces as they were fit. The only key here is to take your time.

FRONT STILES. Once all the side molding was installed, I started work on trimming out the front of the case. This begins with wide stiles that flank the case sides.

Like the side stiles, the two-section front stiles butt up to each side of the case trim and end flush with the top or bottom of the case. The outside edges are softened with a bead profile.

So after cutting two extra-long blanks to width, I headed back to the router table to form the profile. A single pass across a beading bit is all it takes (box below).

With the beads completed, I cut sections of stile to fit and glued and clamped them in place. Just make sure the outside edges are flush with the side stiles.

FRONT EDGING. You can complete hiding the plywood case by installing edging on the fronts of all the dividers. Again, simple butt joints and glue do the trick.

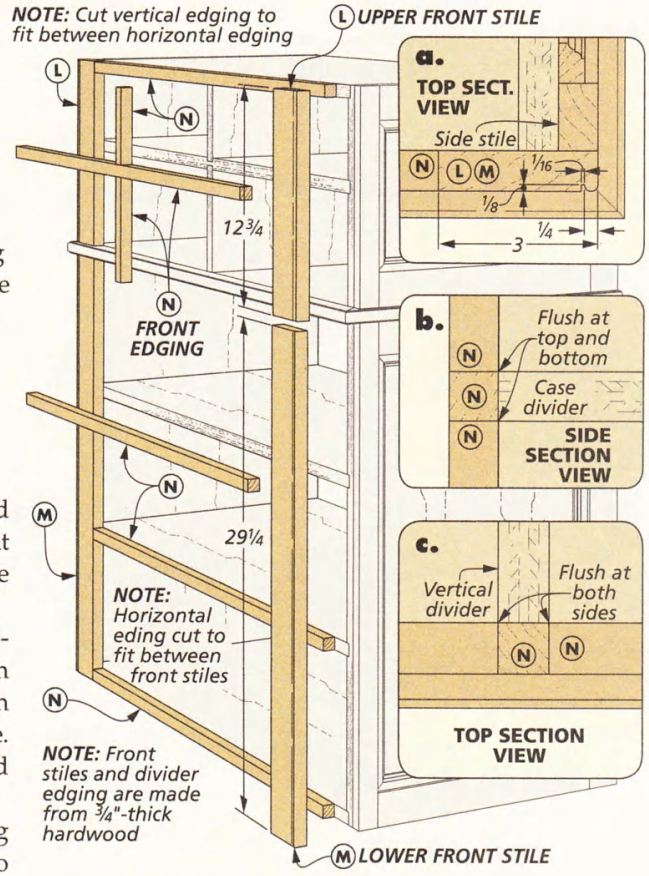

First, I ripped extra-long edging pieces to width from ¾"-thick stock. They should match the thickness of the plywood dividers.

Next, starting at the bottom, I cut pieces to fit the horizontal dividers. A tight fit between the front stiles is the goal. I glued each piece in place as it was fit, clamping from front to back. And after all the horizontal strips are attached, the short vertical pieces can be cut to fit and glued on.

Side Molding & Front Stiles

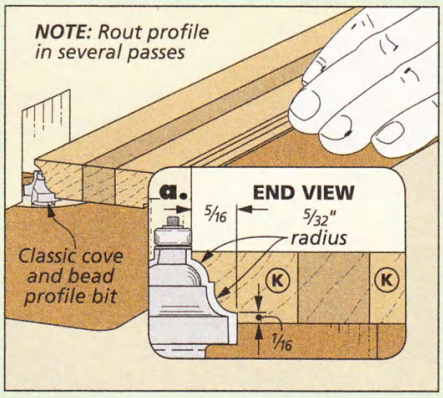

Router Table. *After setting the bit height, rout the profile in multiple pasess by adjusting the fence in between.*

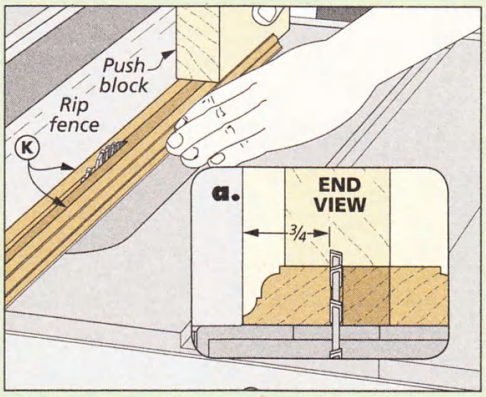

Table Saw. *Now you can rip the molding to final width at the table saw. Be sure to use a push block to complete the cuts.*

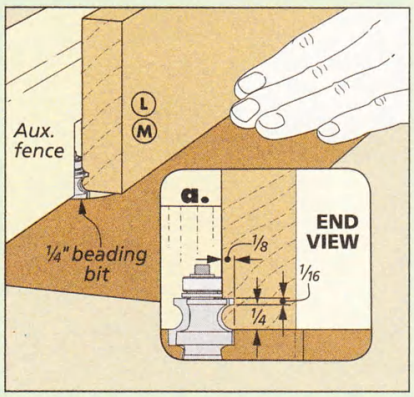

Bead. *Use test cuts to zero in on the proper bit height before routing the bead profile on the front stiles.*

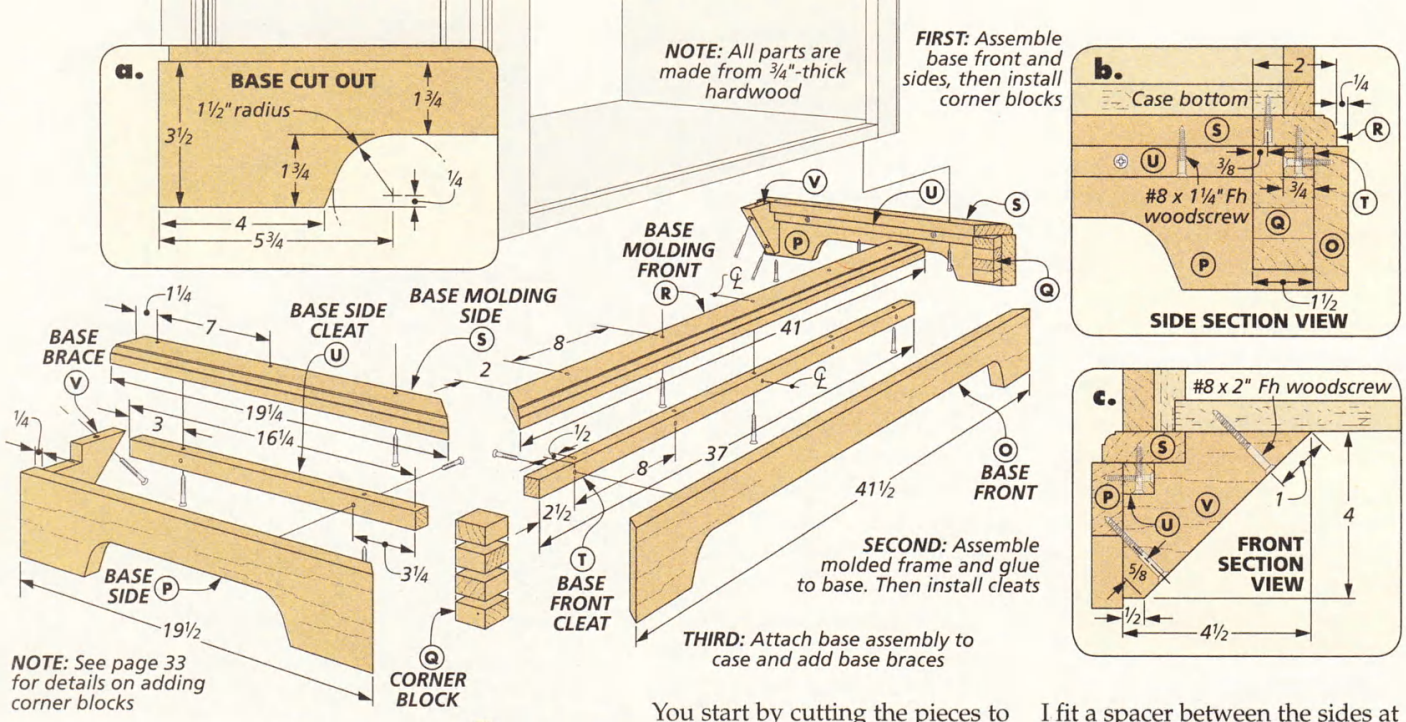

completing the CASE

The plain plywood case has definitely taken on a new look. Adding a base, a top, and a back will complete the makeover.

THE BASE. The base is made up of two mitered frames — a taller base frame and a ¾"-thick molded frame (drawing above). These three-sided frames are assembled separately and then glued together. First comes the more involved base frame.

The box below shows the details on the base frame construction. You start by cutting the pieces to width and rough length. Next, you can miter the front corners of the frame, and then crosscut the side pieces to final length.

CUTOUTS. The base front and sides all have cutouts that form "feet" at the corners. So before assembling the base frame, you have more work to do.

The profile of the cutouts is not complex — just a short bevel leading up to a curved section that transitions into a "straight-away" (detail 'a'). The How-To box below will guide you through the procedure I used.

When you're satisfied with the appearance of the profiles, the miter joints can be glued up. I fit a spacer between the sides at the back and used a pair of band clamps to pull the joints together. Make sure the frame is square.

CORNER BLOCKS. The miter joints are reinforced with corner blocks (detail 'b'). Here, I drew upon a traditional technique designed to avoid problems caused by cross-grain construction. You'll find all the details on page 33.

MOLDED FRAME. Next comes the molded frame. It's a quick build. First, I cut three extra-long blanks to width and then took them to the router table to rout the profile (How-To box). With this task completed, you can cut the miters and then crosscut the sides to final length. Before assembling

How-To: Base Frame

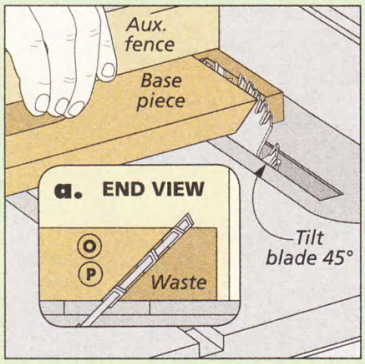

Miters First. *Before crosscutting the side pieces to length, miter the front corners of the base.*

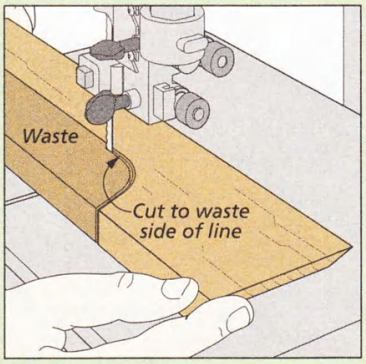

Band Saw. *After laying out the base profiles, remove the waste, staying close to the layout line.*

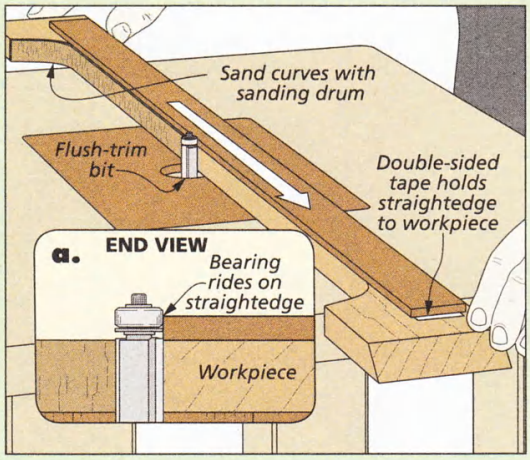

Flush Trim. *The straight sections of the profile can be smoothed with an attached straightedge and a flush-trim bit in the router table.*

the frame, you'll want to drill the countersunk screw holes used to attach the base to the case.

For this assembly, I dispensed with clamps. I applied glue to both miters, rubbed them together firmly, aligned the joint, and then held it until the glue tacked up.

REINFORCEMENT. After gluing the two frames together, I added a set of cleats to reinforce the joints between them (main drawing, opposite page). The cleats are glued and screwed in place.

The base also needs a pair of braces at the back. But before making and installing these pieces, I fastened the base to the case. You'll have to flip the case upside-down to install the screws (detail 'b,' opposite page).

Take a look at the illustrations below to see how I made the notched braces. When they're ready to go, they can be installed with glue and screws flush with the back edge of the case bottom.

THE TOP

Once the case is righted, you can turn your attention to the case top — a much less involved job. The top is just a plywood panel that's wrapped on all four sides with solid-wood edging (main drawing above). So your first step is to cut a ¾" plywood panel to size.

THE BORDER. With the panel in hand, I cut blanks for the border to width and rough length. The border is mitered at the front corners, while the back piece simply fits between the side pieces. The front and side pieces will be molded after they're glued on.

The back piece is cut and installed first. It should fit flush at both ends of the panel and flush with both surfaces. Now, you can miter and crosscut the front and sides to fit — first the front piece then the two sides.

MOLDING. Once all the border pieces were in place, I took the top to the router table to add a roundover profile. It's identical to that used on the case trim (detail 'a'). A single pass along both edges of the front and sides is all it takes. Finally, the top can be attached with glue alone.

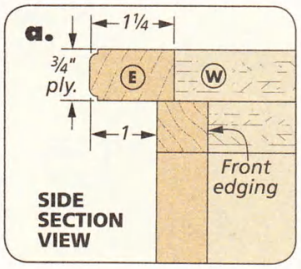

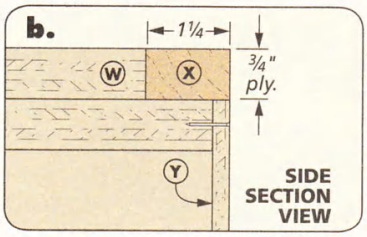

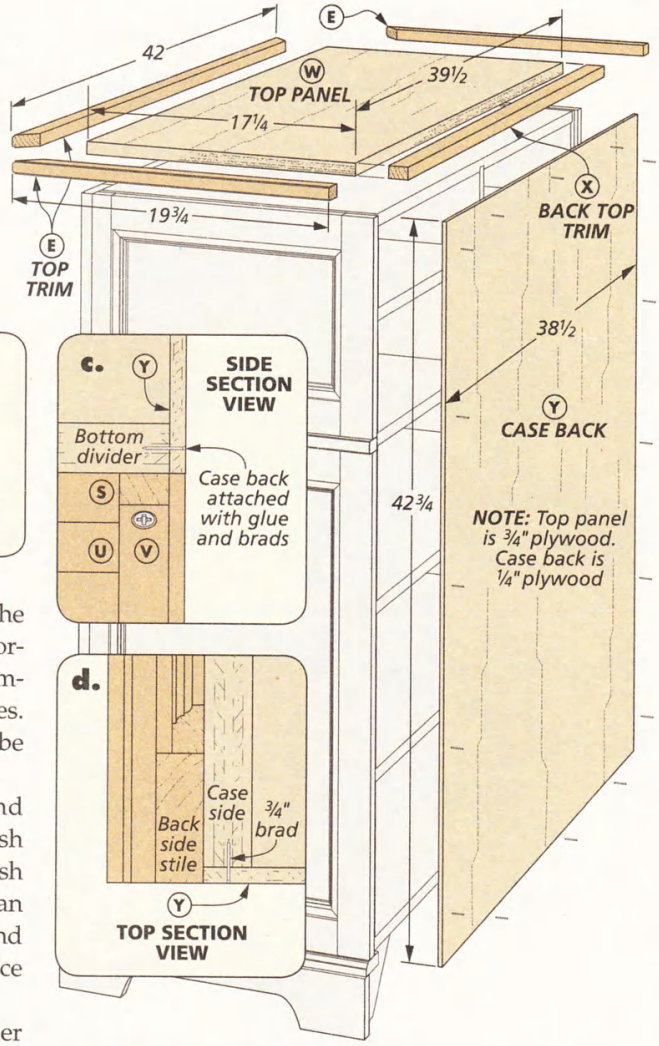

THE BACK. Now that the base and top have both been fastened in place, you can close up the back of the case. All you need to do is cut the ¼" plywood panel to size and glue and tack it to the sides and dividers. The details above show how it should fit.

Molded Frame & Base Braces

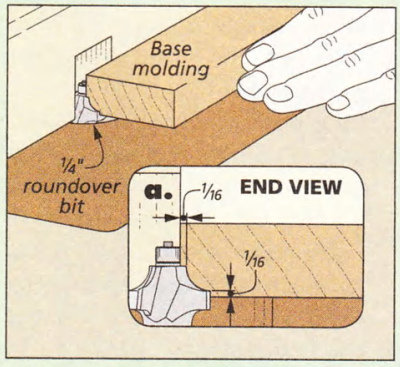

Roundover with Fillets. *The simple profile on the molded frame pieces can be cut in a single pass.*

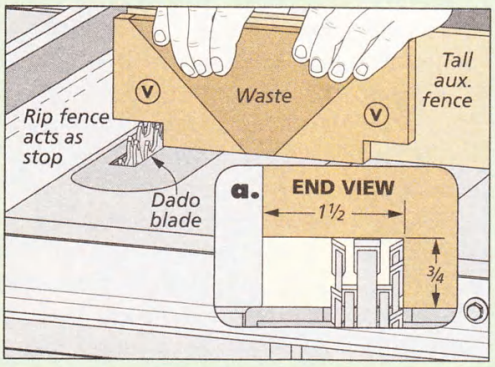

Notches First. *After cutting an extra-long brace blank to size, I switched to a wide dado blade to cut a notch at each end.*

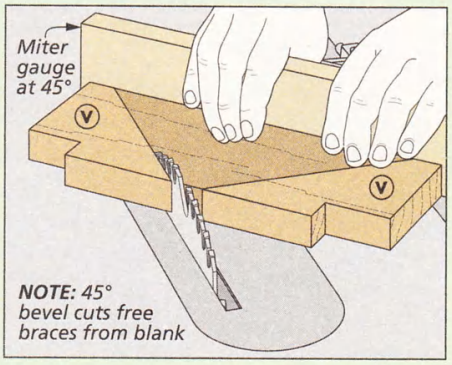

Bevel Cuts. *To complete the braces, switch back to a standard blade and cut each one free at a 45° bevel.*

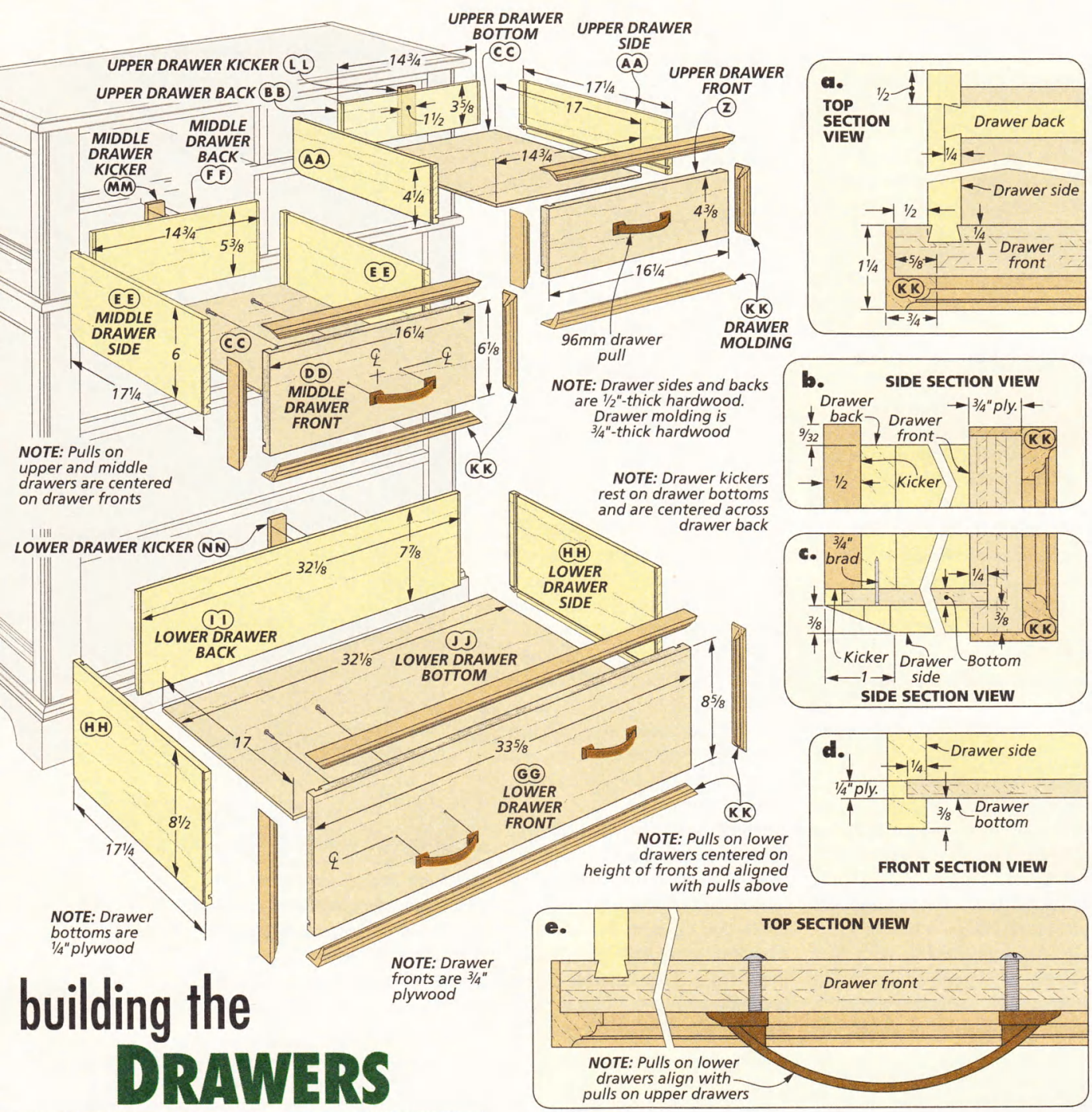

building the DRAWERS

Building and installing the drawers that fill the case will close out the job. As you can see above, the design of the drawers follows that of the case. The fronts are cut from ¾" plywood and then wrapped with molding. The result offers a richly detailed look.

The joinery I used to build the drawers is a tad outside the box. The sides are attached to the fronts with sliding dovetail joints. The back is joined to the sides in the same manner. The key to success is to stay focused and go slow.

FRONTS. I started by cutting the fronts to size. The drawer molding that wraps the fronts will add ⅛" on all four sides (detail 'e'). Plus, the design allows for a 1/16" final gap all around. So I cut the fronts ⅜" less than the size of the openings in each dimension.

SIDES & BACKS. Next, I cut all the sides and backs to finished size from ½"-thick stock. Note that the backs are narrower than the sides. This creates a gap that allows you to install the bottom after assembly (detail 'c').

JOINERY. The How-To box on the opposite page picks up the story from here. Your first stop is the router table to begin the joinery. First, you'll cut a pair of dovetail slots in each front. Careful setup is key. I used test cuts to adjust the bit height and fence setting.

Once all the slots in the fronts are cut, repeat the process on the drawer sides. You can use the exact same setup.

DOVETAILS. The mating dovetails on the ends of the sides and the backs are cut using same bit set to

the same height. However, these cuts require the bit to be recessed in a tall fence. The workpieces are then held on end as they're passed across the bit.

The goal is a fit that's not too tight or too loose. Remember, you'll be adding glue to the joints.

Here again, the sides and the backs can be cut with this same setup. I would recommend that while you still have the router table set up, you test fit all the joints. Don't assume that because one fits, they all will.

GROOVES & BEVELS. Before gluing up the drawers, there are two more tasks. First, I cut grooves for the plywood bottom in the fronts and sides. Lastly, I cut a short bevel on the lower back edge of each side that allows the drawers to be tipped into their openings (detail 'c,' opposite page).

ASSEMBLY. Now the drawer boxes are ready for glueup. Just make sure the bottom edges of the sides and front are flush and the bottom edge of the back is flush with the top of the grooves (details 'b' and 'c,' opposite page).

DRAWER MOLDING. After installing the bottoms, you can complete the major work by making and applying the molding to the fronts. As shown in the detail drawings on the opposite page, this molding wraps around the edges of the plywood.

The drawings at right show the steps to making the molding. You'll rout the profile on wide blanks, cut pieces to final width, and then form the rabbets.

INSTALL THE MOLDING. Mitering the molding to fit just takes patience. Starting with a short end piece, I worked around each front, mitering the corners and gluing and pinning each piece in order.

KICKERS. Since the drawer sides and backs sit below the fronts, I glued kickers to the backs to keep them from tipping when opened. These pieces extend from the drawer bottom to 9/32" above the top edge of the backs (details 'b' and 'c,' opposite page).

How-To: Drawer Construction

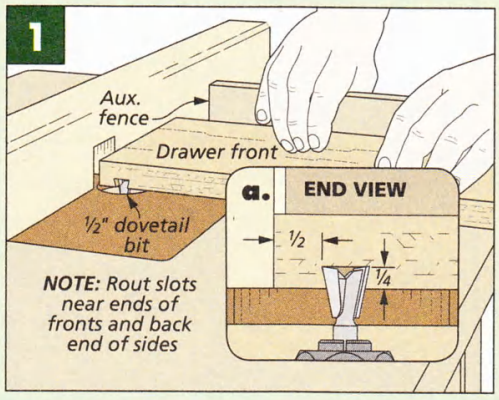

Dovetail Slots. *Once you've fine-tuned the router table setup, cut each dovetail slot with a single, slow and steady pass over the bit.*

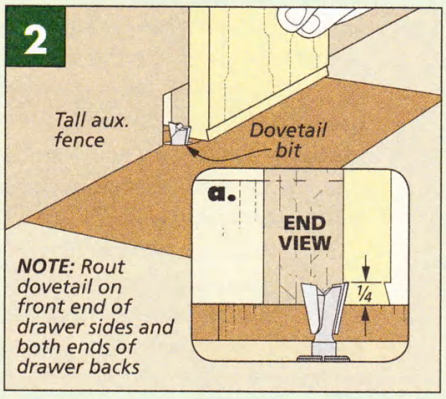

Dovetails. *Use a test piece to sneak up on the proper fence setting. You want a dovetail that slides easily into the socket.*

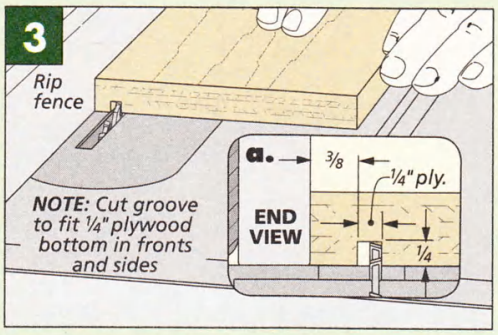

Bottom Grooves. *To cut grooves sized to the 1/4" plywood, make two passes across a standard blade adjusting the rip fence in between.*

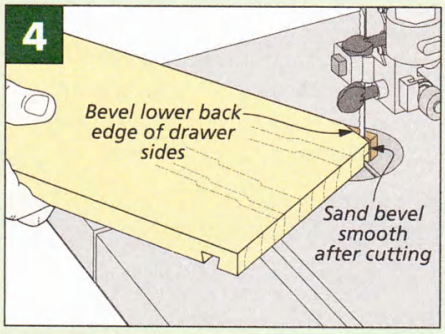

Bevels. *After laying out the bevels on the sides, remove the waste at the band saw, and sand or plane the cuts smooth.*

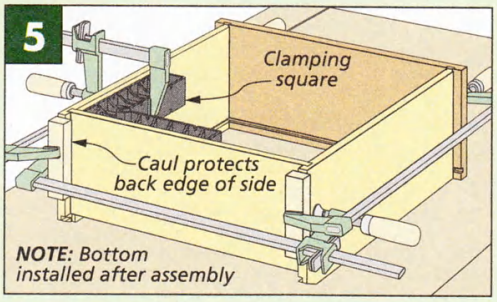

Glue Up. *Even though the joints lock, I used clamps to help keep them tight and also square up the boxes while the glue set.*

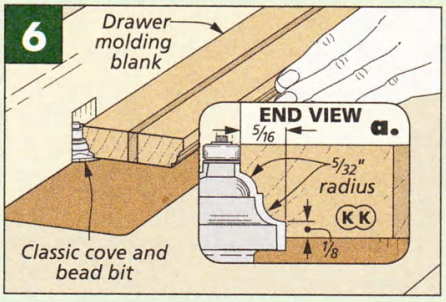

First, the Profile. *Start the drawer molding by routing a bead and cove profile on both edges of the wide blanks.*

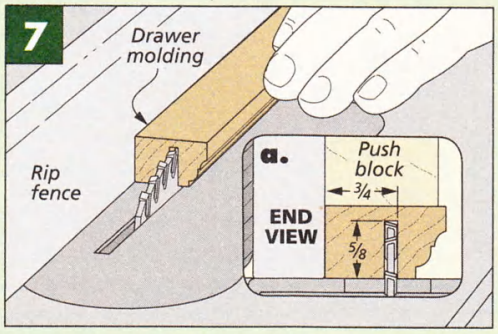

Begin the Rabbet. *After ripping the molding to width from the blanks, start the rabbets by making a cut with the pieces lying flat.*

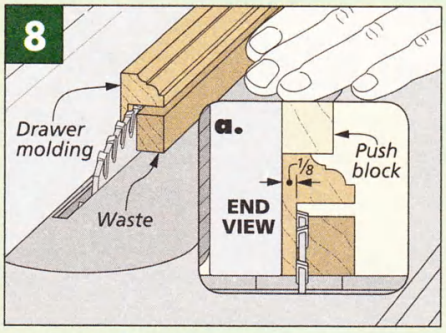

Complete the Rabbet. *Next, reset the fence, adjust the blade, and then stand the pieces on edge to remove the waste.*

GUIDES & STOPS

To make the drawers fully operational, you need to install guides and stops in the case.

GUIDES. As you can see in details 'b' and 'c,' the inner and outer guides are different widths. I cut blanks to size from ½"-thick stock and then cut the rabbets in two passes across a standard blade.

The guides are sized to fit tight against the case sides and vertical dividers. However, if a drawer fits too loose or tight, the guides can be shimmed out or trimmed down. You want to shoot for 1/32" clearance at each side.

With the guides glued in place, the end is near. All you need to do is add thin stops to the case that align with the drawer kickers (detail 'a'). Now you have a finish to apply before thinking about the next addition to the suite. W

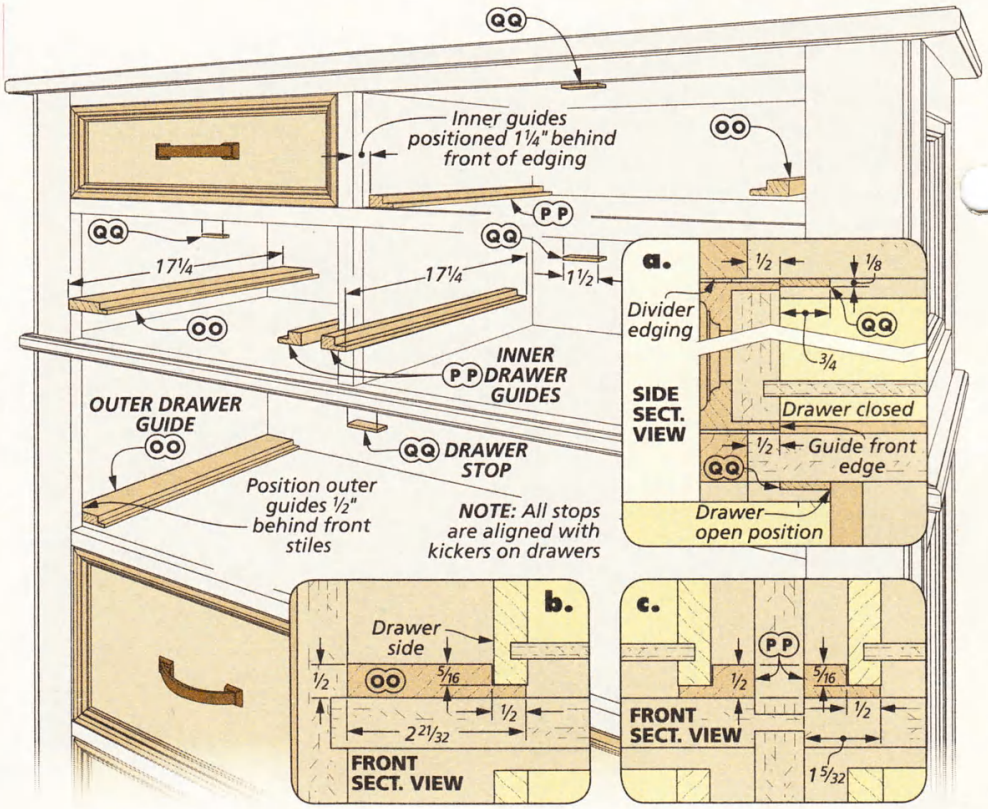

Materials, Supplies & Cutting Diagram

A	Case Sides (2)	¾ ply. - 17¾ x 42¾
B	Case Dividers (6)	¾ ply. - 17¾ x 37½
C	Upper Vert. Divider (1)	¾ ply. - 17¾ x 5¼
D	Lower Vert. Divider (1)	¾ ply. - 17¾ x 7
E	Case/Top Trim (1)	¾ x 1¼ - 164 rgh.
F	Upper Front Side Stiles (2)	¾ x 1¼ - 12¾
G	Lower Front Side Stiles (2)	¾ x 1¼ - 29¼
H	Upper Back Side Stiles (2)	¾ x 2 - 12¾
I	Lower Back Side Stiles (2)	¾ x 2 - 29¼
J	Side Rails (8)	¾ x 2 - 14¾
K	Side Molding (1)	½ x ¾ - 280 rgh.
L	Upper Front Stiles (2)	¾ x 3 - 12¾
M	Lower Front Stiles (2)	¾ x 3 - 29¼
N	Front Edging (1)	¾ x ¾ - 240 rgh.
O	Base Front (1)	¾ x 3½ - 41½
P	Base Sides (2)	¾ x 3½ - 19½
Q	Corner Blocks (8)	¾ x 1½ - 1½
R	Base Molding Front (1)	¾ x 2 - 41
S	Base Molding Sides (2)	¾ x 2 - 19¼
T	Base Front Cleat (1)	¾ x ¾ - 37
U	Base Side Cleats (2)	¾ x ¾ - 16¼
V	Base Braces (2)	¾ x 4 - 4½
W	Top Panel (1)	¾ ply. - 17¼ x 39½
X	Back Top Trim (1)	¾ x 1¼ - 39½
Y	Case Back (1)	¼ ply. - 38½ x 42¾
Z	Upper Dwr. Fronts (2)	¾ ply. - 4⅜ x 16¼
AA	Upper Dwr. Sides (4)	½ x 4¼ - 17¼
BB	Upper Dwr. Backs (2)	½ x 3⅝ - 14¾
CC	Upper/Mid. Dwr. Bot. (4)	¼ ply. - 14¾ x 17
DD	Mid. Dwr. Fronts (2)	¾ ply. - 6⅛ x 16¼
EE	Mid. Dwr. Sides (4)	½ x 6 - 17¼
FF	Mid. Dwr. Backs (2)	½ x 5⅜ - 14¾
GG	Lower Dwr. Fronts (3)	¾ ply. - 8⅝ x 33⅝
HH	Lower Dwr. Sides (6)	½ x 8½ - 17¼
II	Lower Dwr. Backs (3)	½ x 7⅞ - 32⅛
JJ	Lower Dwr. Bottoms (3)	¼ ply. - 32⅛ x 17
KK	Drawer Molding (1)	¾ x 1¼ - 440 rgh.
LL	Upper Drawer Kickers (2)	½ x 1½ - 3 29/32
MM	Mid. Drawer Kickers (2)	½ x 1½ - 5 21/32
NN	Lower Drawer Kickers (3)	½ x 1½ - 8 5/32
OO	Outer Drawer Guides (10)	½ x 2 21/32 - 17¼
PP	Inner Drawer Guides (4)	½ x 1 5/32 - 17¼
QQ	Drawer Stops (7)	⅛ x ¾ - 1½

- (10) 96mm Drawer Pulls w/Screws
- (4) #8 x 2" Fh Woodscrews
- (30) #8 x 1¼" Fh Woodscrews
- ¾" Brads

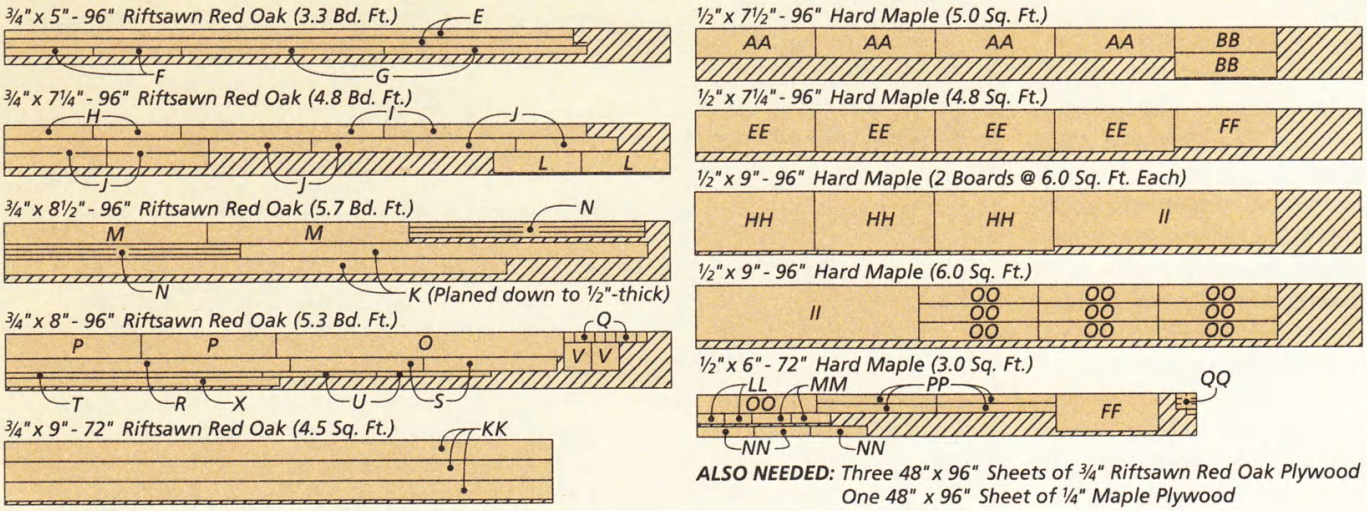

ALSO NEEDED: *Three 48" x 96" Sheets of ¾" Riftsawn Red Oak Plywood*
One 48" x 96" Sheet of ¼" Maple Plywood

SHOP NOTEBOOK

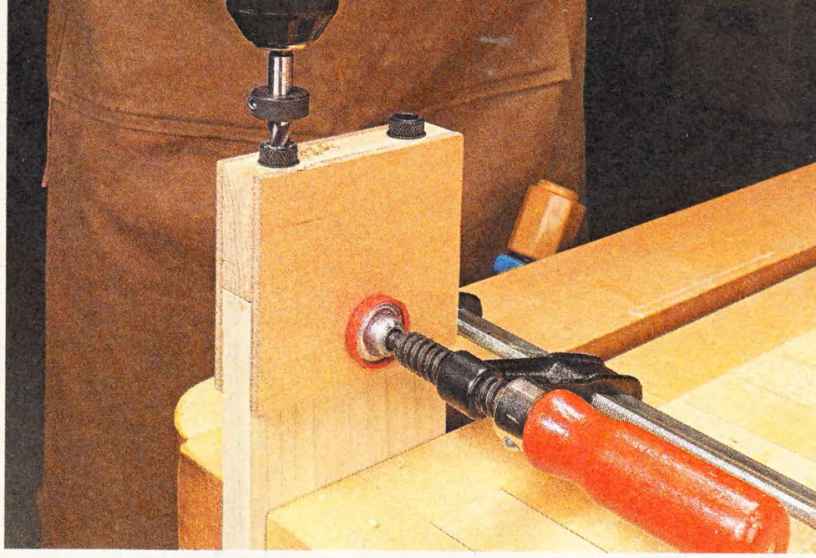

Dual-Angle Doweling Jig

The plant stand on page 16 features frames joined with dowels. And to make things more challenging, one side of the frame requires the holes for the dowels to be drilled at a slight angle (85°), while the other side is square and has holes drilled at 90°.

TWO JIGS IN ONE. To address this challenge, I made a jig that drills holes at both angles. The secret is an angled guide block. Start by cutting it to size and then drill the two holes in it. Trim off a 5° wedge on the band saw and set it aside. Now add bushings and inserts that guide the drill bit (Sources, page 51). Finish up by gluing on the plywood fences.

USING THE JIG. To drill holes at 85° with the jig, you simply leave the angled wedge piece off. Then, when it's time to drill 90° holes, stick the wedge in place with double-sided tape. In order to drill holes to a precise depth using the jig, I added a stop collar to the bit as shown in the photo above.

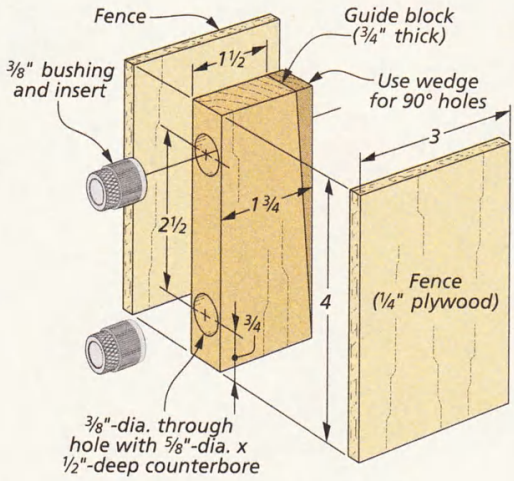

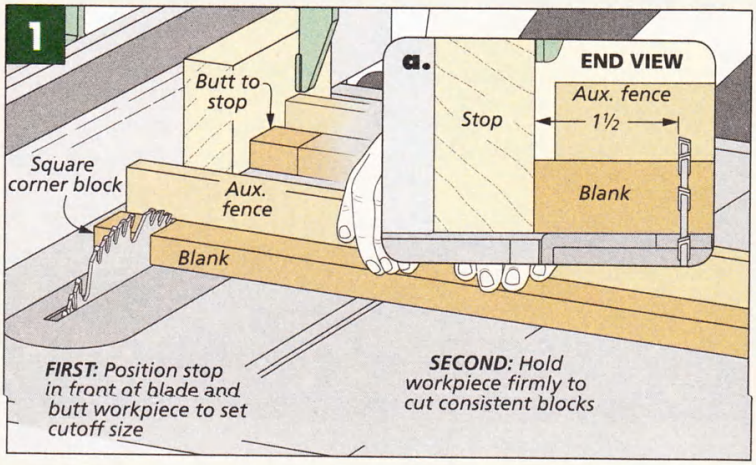

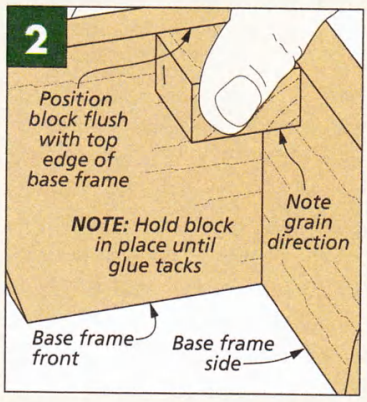

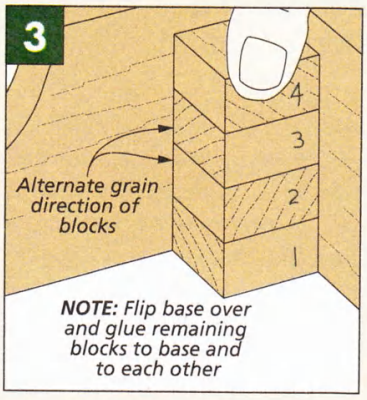

Corner Blocks

I used a technique borrowed from the "old masters" to add corner blocks to the miter joints of the dresser base on page 22. The result is strong reinforcement that avoids problems caused by cross-grain construction.

Rather than install long-grain "cleats" in the joints, I glued a stack of four, square blocks into each corner. The grain direction of the blocks alternates to provide long-grain gluing surface on both sides of the joint. And when the blocks are also glued face to face, you have one solid column.

I started by cutting eight blocks to size from 3/4"-thick stock (Figure 1). Now the blocks can be installed one at a time. Apply glue to the first block, position it flush with the top edge of the base, and hold it until the glue grabs. Flip the base over to install the remaining three blocks, making sure to alternate the grain directions. W

mobile Kitchen Cart

A cutting board on wheels with some extra storage below is sure to be a hit with anyone who spends time in the kitchen.

I can't remember anyone ever complaining that they had too much countertop and storage space in the kitchen. It seems that no matter how much space we have, there's always more stuff to fill the void.

That's why the kitchen cart shown above is such a hit. It not only provides a handy, edge-grain cutting board top for meal preparation, but also a convenient drawer and cabinet. For added storage, the back side features a rack for other small items. On top of all that, the cart is equipped with sturdy, locking casters so you can roll it right where you need it.

But the thing I like most is the ease of building this project. It's made of plywood with hardwood edging. I used straightforward tongue and dado joinery, so the construction was a breeze. And since it's painted, you can get away with using poplar instead of a more expensive hardwood.

CONSTRUCTION DETAILS

OVERALL DIMENSIONS: 21"D x 26½"W x 35¼"H

Edge-grain cutting board glued up from narrow strips of 8/4 maple

Shallow storage rack on back of cart adds a few shelves for small items

Non-skid discs attached to case top hold the cutting board in position during use

Convenient drawer mounted on full-extension slides keeps often-used items close at hand

Corbels on the sides hold towel rack

Adjustable shelf allows you to customize storage space

Euro-style hinges are easy to install and adjust for a perfect-fitting door

Tongue and dado joinery makes the project easy to build

Frame and panel door features hardwood rails and stiles with plywood panels

Locking casters are mounted to a plywood base

FRONT SECTION VIEW

Dowels connect arms to corbels

Corbels and towel bars are attached to case with screws

▲ The cutting board is held in place with non-skid discs, so it simply lifts out for easy cleaning.

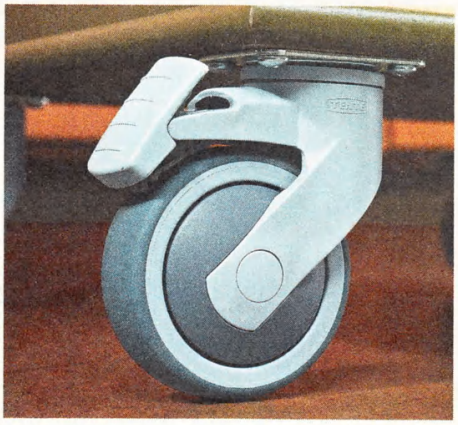

▲ The rubber wheels on the casters allow you to roll the cart anywhere without damaging the floors.

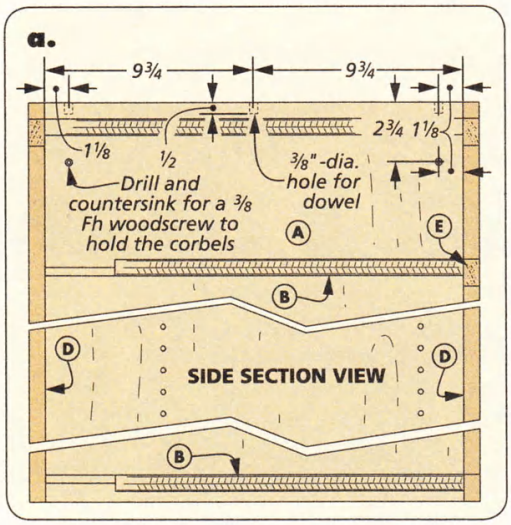

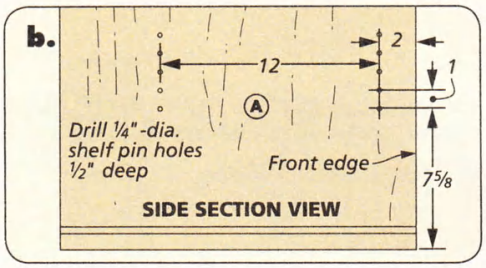

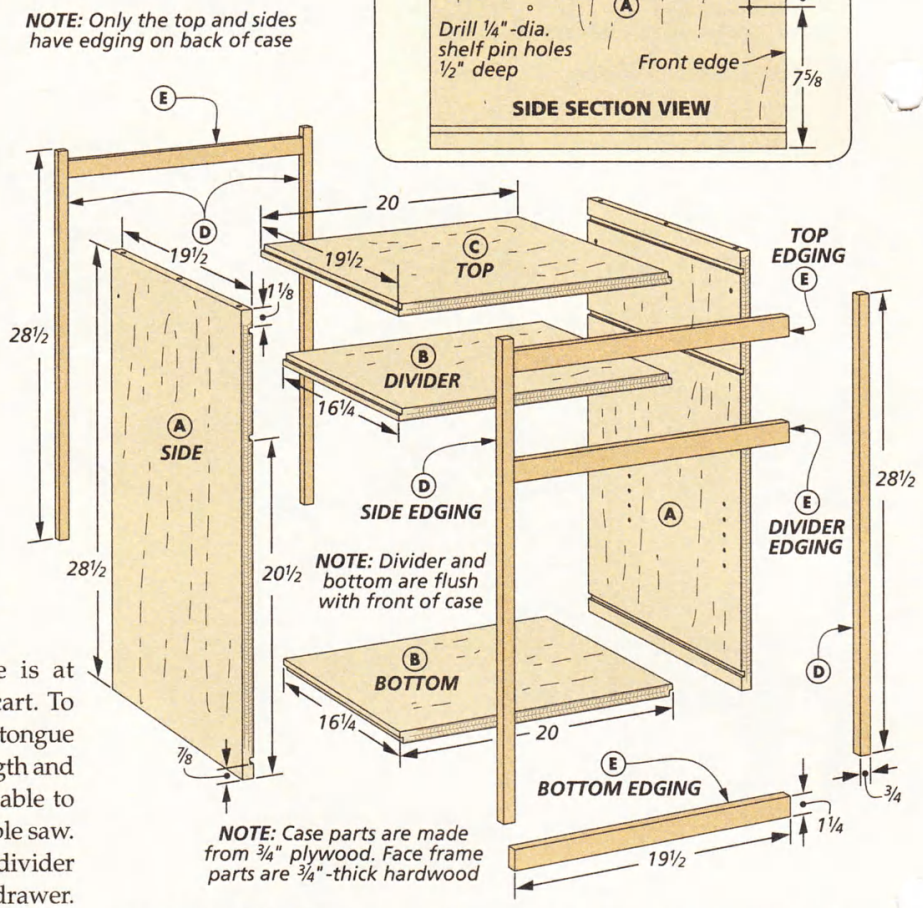

making the CASE & ARMS

A simple plywood case is at the heart of the kitchen cart. To assemble the case, I used tongue and dado joinery for strength and convenience. I like being able to cut all the joinery at the table saw. Inside the case is a fixed divider that houses a convenient drawer. It all starts with the sides.

SIDES. The sides of the case have dadoes to position the top, bottom, and divider, so making them is the first order of business. After cutting the sides to final size, install a ⅜" dado blade in the table saw. The main drawing shows the location for each dado. The box below shows how to cut them. This method ensures you'll have perfect-fitting joints.

SHELF PIN HOLES. The adjustable shelves rely on a series of evenly spaced shelf pin holes in each side. Just mark the locations and drill them with a hand drill. I also drilled countersunk screw holes that will be used to attach a pair of corbels (detail 'a').

TOP, DIVIDER & BOTTOM PANELS. The top, divider, and bottom all have tongues on the ends to fit into the dadoes you cut in the sides. As you can see in the main drawing, the bottom and divider are the same size, but the top is a bit wider. This leaves room for some shelves you'll add to the back later. For now, cut the pieces to final size. Then install an auxiliary rip fence and bury part of the dado blade in the fence to cut the tongues. Sneak up on a tight fit for the tongues and then assemble the case.

How-To: Case Joinery

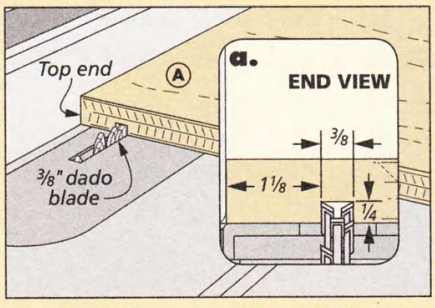

Dadoes. *With a dado blade in the table saw, use the rip fence to locate the dadoes in the case sides.*

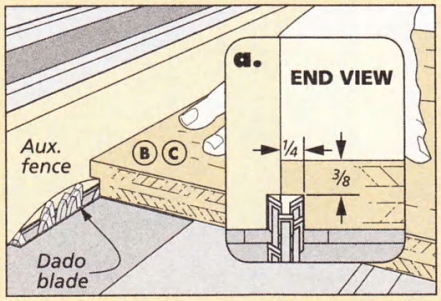

Tongues. *Bury a wider dado blade in an auxiliary fence to cut the tongues. Sneak up on a snug fit to the dadoes.*

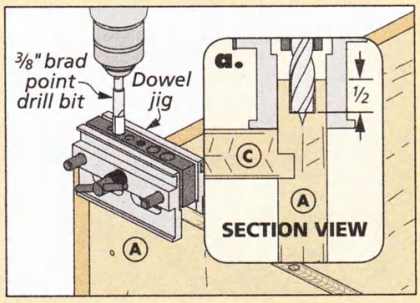

Dowel Holes. *I used a dowel jig to make sure the holes for the dowels were centered and square.*

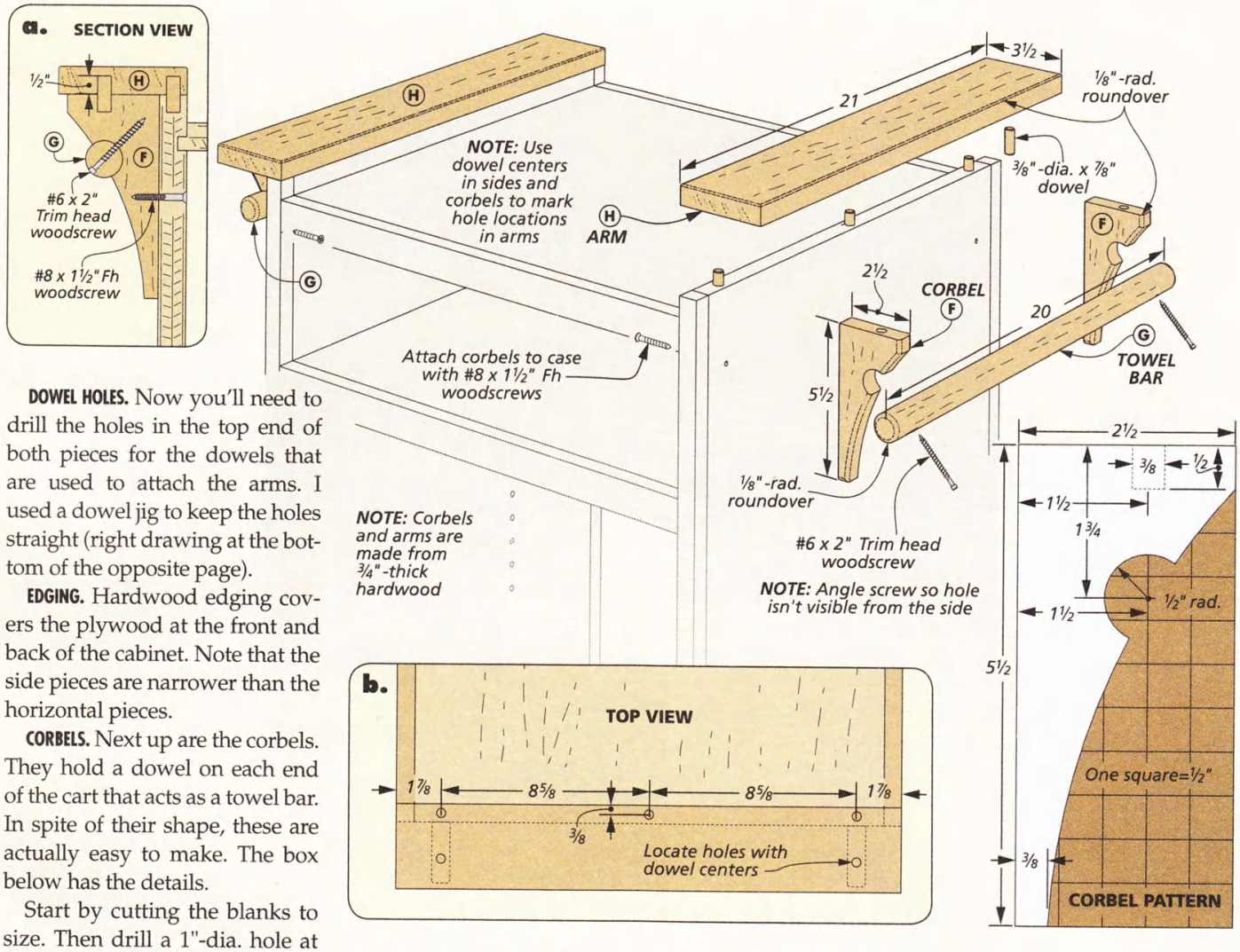

DOWEL HOLES. Now you'll need to drill the holes in the top end of both pieces for the dowels that are used to attach the arms. I used a dowel jig to keep the holes straight (right drawing at the bottom of the opposite page).

EDGING. Hardwood edging covers the plywood at the front and back of the cabinet. Note that the side pieces are narrower than the horizontal pieces.

CORBELS. Next up are the corbels. They hold a dowel on each end of the cart that acts as a towel bar. In spite of their shape, these are actually easy to make. The box below has the details.

Start by cutting the blanks to size. Then drill a 1"-dia. hole at the location shown in the margin drawing. You'll also need to drill 3/8"-dia. holes in the top of each corbel for dowels to attach the arms.

Next, mark the two points that form the arc and bend a thin strip of wood between them to trace the arc on the blank. Cut the arc on the band saw (left drawing, below). After sanding the curve, you can use this corbel as a template for shaping the remaining three (center and right drawings below).

When you're finished, attach the corbels on the sides, as shown in detail 'a,' above. Then cut the towel bars to size and install them with screws in the corbels.

ADD THE ARMS. A pair of arms are attached to the corbels and sides with dowels. A sure way of getting them to align properly is to put dowel centers in the holes in the sides and corbels (detail 'b'). Just place the arms in the proper position and give them a tap to mark the locations. After drilling each hole, a little glue on the dowels is all it takes to install the arms properly.

Making the Corbels

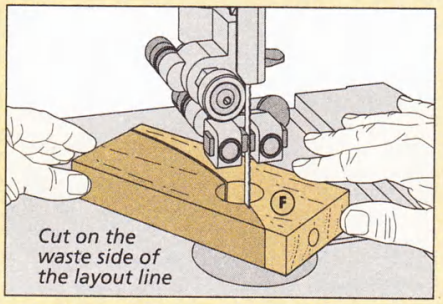

Band Saw. *After drilling the hole and laying out the shape, I cut the corbel to shape at the band saw.*

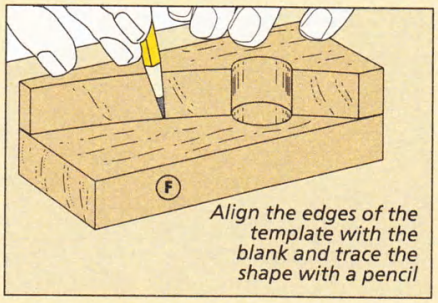

Template. *With the first corbel complete, you can use it as a template to trace the shape on the remaining three blanks.*

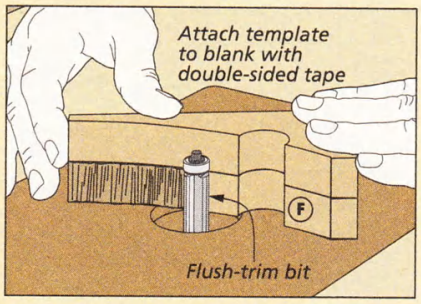

Flush Trim. *The template also comes in handy at the router table to trim the corbels to the exact shape.*

build the DRAWER & DOOR

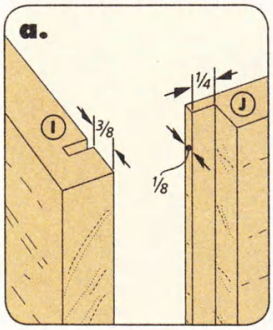

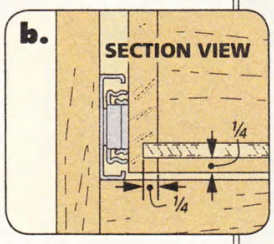

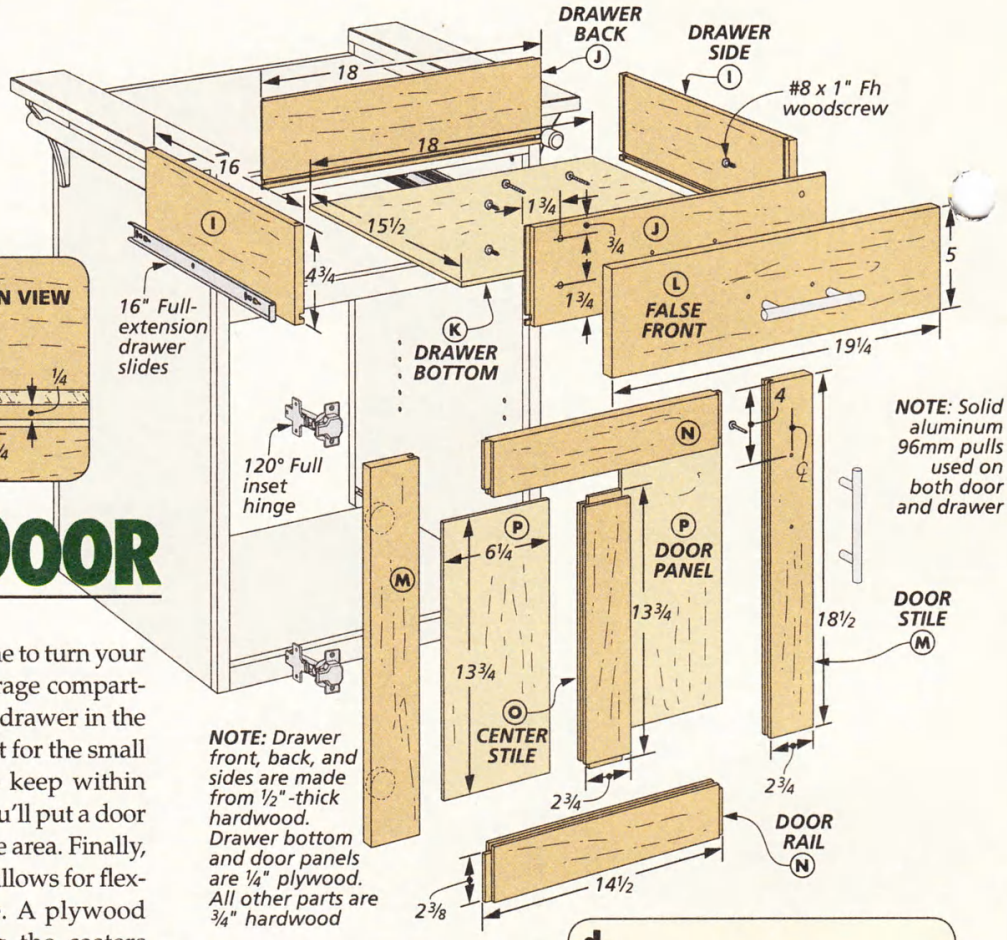

At this point, it's time to turn your attention to the storage compartments. First up is a drawer in the upper compartment for the small items you want to keep within easy reach. Then you'll put a door on the lower storage area. Finally, an adjustable shelf allows for flexible storage inside. A plywood base for attaching the casters rounds out the cabinet.

DRAWER. Tongue and dado joinery makes for a simple, yet strong drawer. The How-To box below walks you through the steps for cutting the joinery and fitting the false front. Note that the drawer front, back, and sides are made from 1/2"-thick stock, but the false front is 3/4" thick. On the front, you'll need to drill a few holes. As you can see in the main drawing, there are four holes near the ends for attaching the false front.

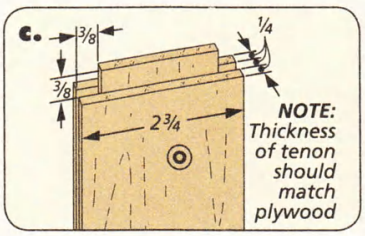

After cutting the joinery and a groove for the bottom, dry fit the assembly around the bottom. Then, assemble with glue making sure it stays square. When the glue dries, center the false front as

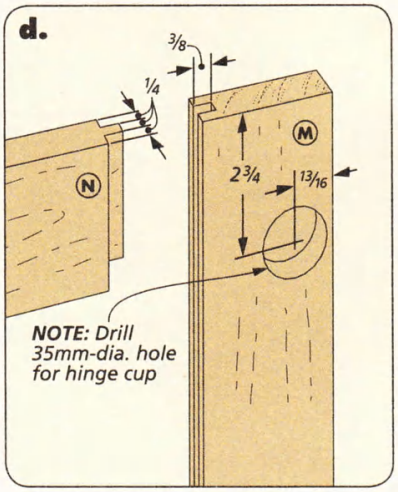

How-To: Make the Drawer

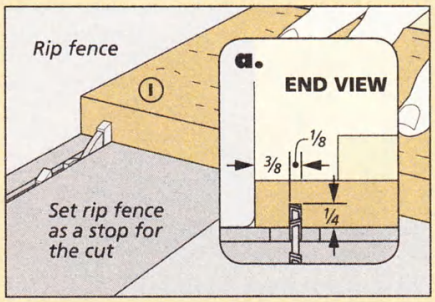

Dadoes. *With a regular (1/8"-kerf) blade installed, use a miter gauge with an auxiliary fence to cut the dadoes in the sides.*

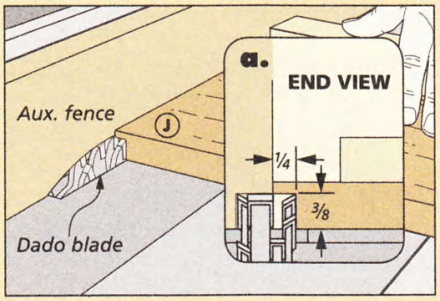

Tongues. *Just like when you cut the tongues earlier, bury the dado blade in an auxiliary fence to cut the rabbet.*

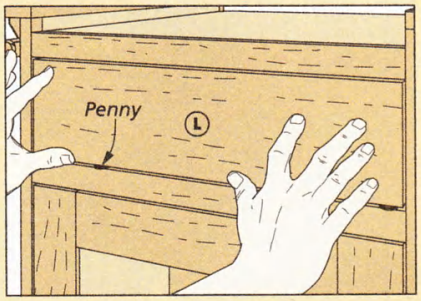

False Front. *Use pennies as shims to align the false front for a consistent gap around all sides.*

shown in the right drawing at the bottom of the opposite page. Then you can attach the false front with screws and drill holes for the pull.

DOOR. A small frame and panel door covers the storage compartment. It's a pretty straightforward stub tenon and groove assembly with hardwood rails and stiles framing plywood panels.

After cutting all the pieces to final size, cut a centered groove in the rails and stiles. Then use a dado blade to cut the stub tenons on the ends of the rails and center stile. The box below shows how to make the cuts. The whole thing can be assembled in no time with glue on the tenons and a bit on the panels to hold them in place.

HINGES. After the glue dries, drill the 35mm holes for the Euro-style cup hinges. The nice thing about this type of hinge is the ease of adjustment. The hardware allows you to raise and lower the door and move it in and out with just a few turns of a screw. You can install the hinges in the cabinet now, and tweak the fit.

ADJUSTABLE SHELF. The storage compartment wouldn't be complete without an adjustable shelf. To make the shelf, all you need to do is cut the plywood to size, and then add a strip of edging. As you can see in the right drawing below, I glued the edging to the shelf first, then used a roundover bit to rout a bullnose profile.

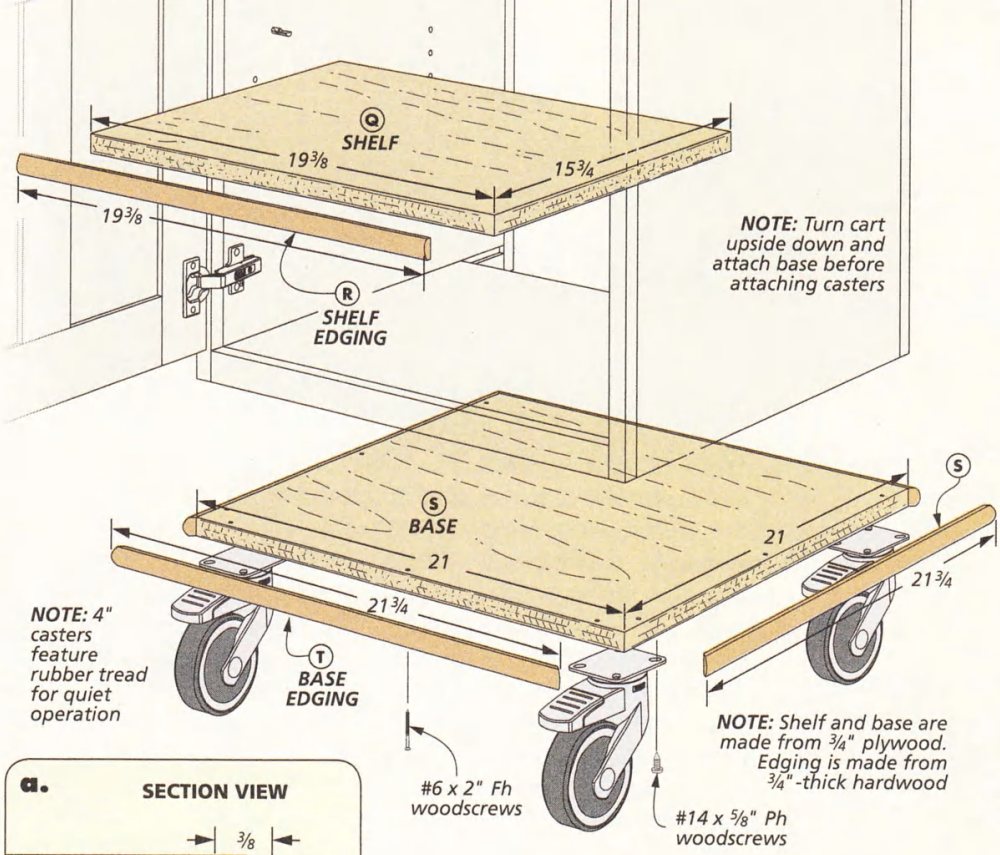

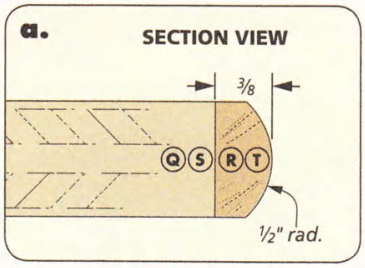

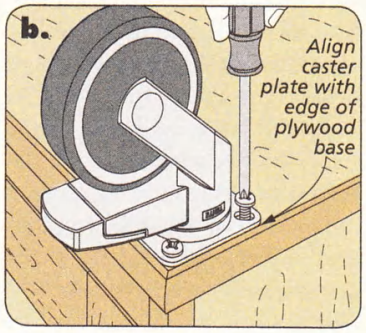

BASE. I added a plywood base for the casters to make everything a bit more stable. (This avoids putting undue stress on the cabinet joinery from the wheels.) It's just a plywood panel with mitered edging. All you need to do to the panel is drill a few countersunk screw holes for attaching it to the cabinet. For the edging, I matched the bullnose profile I used earlier. Once you've finished mitering the edging around the plywood and glued it in place, you can take it to the router table and rout the profile.

Build the Door

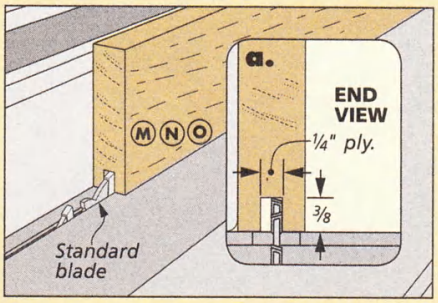

Groove. *Cut a centered groove by making a first pass, then flipping the blank end-for-end and making a second pass.*

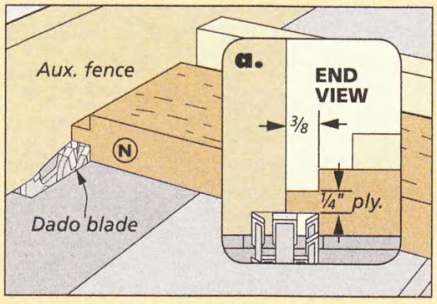

Stub Tenon. *I installed the auxiliary rip fence and dado blade to cut the stub tenons on the rails and center stile.*

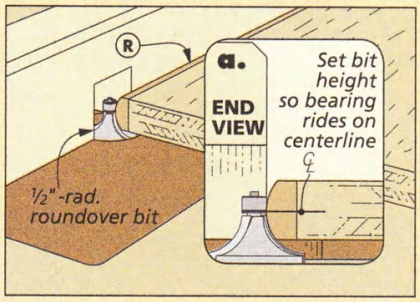

Bullnose. *After attaching a strip of edging to the shelf, rout the bullnose profile using a roundover bit.*

completing the CART

▲ The storage rack is a handy place to store spices and other small items.

There are only a couple of things to do to complete the kitchen cart. For starters, I added a shallow set of shelves on the back side of the cart. These shelves offer a few more options for keeping things close at hand. Then, all that remains is the edge-grain cutting board. For the cook, this is certain to be a big hit. The large surface of the cutting board makes it easy to chop up the ingredients for a whole meal. And since the cutting board is easy to remove, cleanup is also a breeze.

THE RACK. By now, you can see the big space on the back side of the cabinet that holds the storage rack. It's not too difficult to make. Start by cutting the sides and shelves to final size. Then you can work on the sides.

The first step is to cut the dadoes and rabbets that hold the top, bottom, and shelves. This is easily done at the table saw with a dado blade and a miter gauge. The box below spells out the process.

Next, drill the ¼"-deep holes for the dowels. Then drill countersunk screw holes used for attaching the rack to the body of the cart. Assemble the rack with a little glue in the dadoes — no glue is needed to hold the dowel shelf retainers in place. It's crucial to make sure the rack is perfectly square, however, so it will fit snugly in the cart. After the glue dries, fit the rack into the recess and add the screws to hold it in place. Note that the rack is not painted.

CUTTING BOARD. The final piece of the cart is an edge-grain cutting board that acts as the top. It provides the perfect worksurface for cutting and chopping. The maple cutting board and the rack also provide a nice contrast to the painted body of the cart. Altogether, it's a great look.

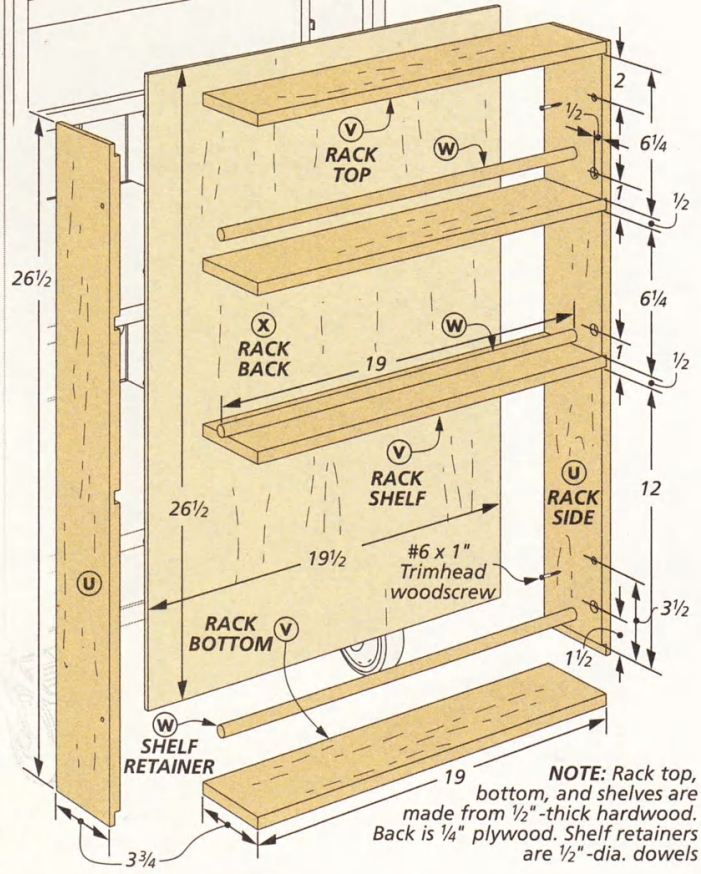

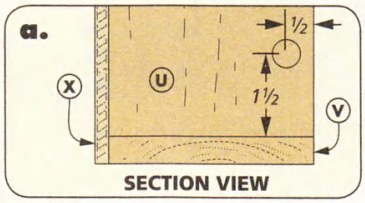

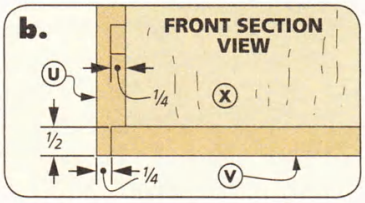

How-To: Make the Back Rack

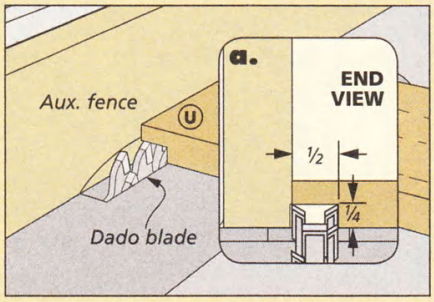

Rabbets. *To get started making the sides, cut a rabbet at each end of the blank. This will hold the top and bottom.*

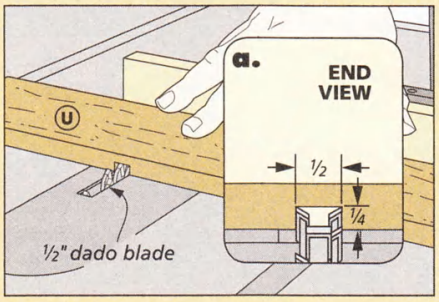

Dadoes. *To cut the dadoes for the shelves, add an auxiliary fence to the miter gauge to support the cut and prevent tearout.*

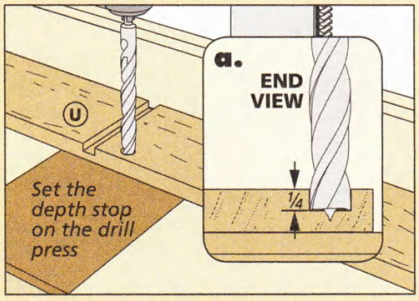

Shelf Retainer Holes. *Install a ½"-dia. bit in the drill press and drill ¼"-deep holes for the shelf retainers.*

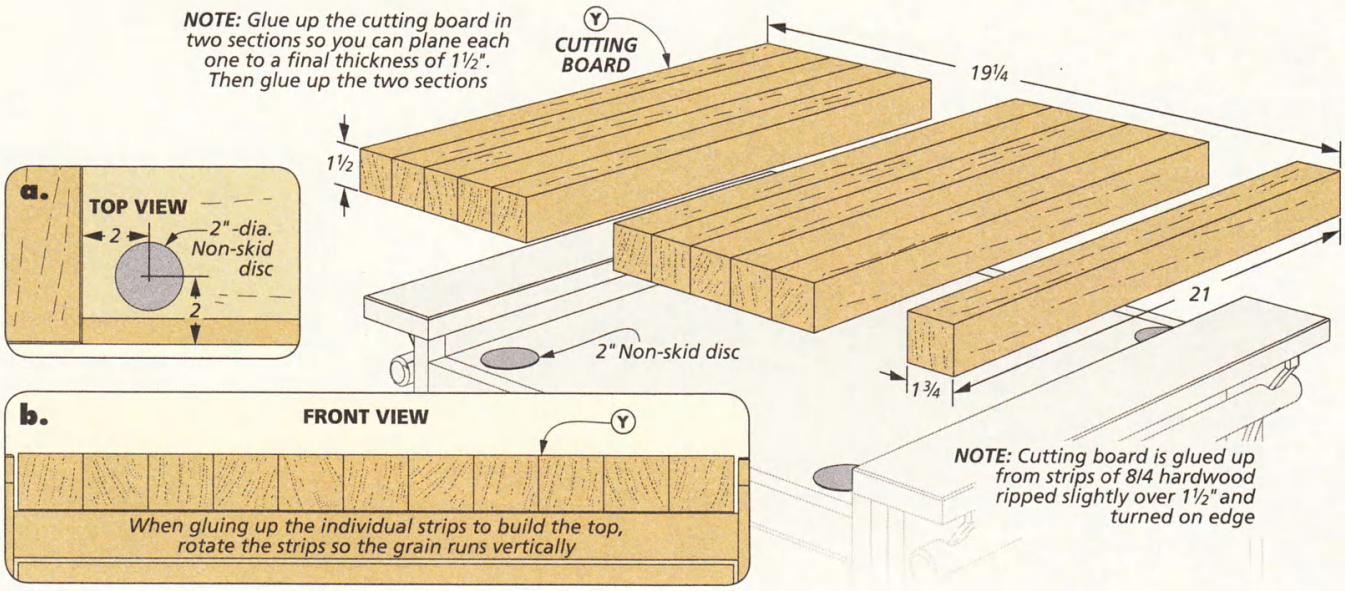

To make the cutting board, rip the stock into 1⅝" x 1¾" strips and slightly oversized in length. Then rotate the strips so the grain is oriented vertically (detail 'b').

I glued up the strips in two sections. This way, I was able to flatten them by running each section through my planer. Plane both sections to the same thickness before gluing them together. Then you only have one glue joint to worry about for the final glueup. By placing a clamp at each end of the joint line, you guarantee that the two sections will line up.

NON-SKID DISCS. At this point, I attached four non-skid discs to the top (see Sources on page 51). These prevent the cutting board from sliding off. After painting the cart and finishing the cutting board, it's ready for service. You're sure to get kudos from the chef. W

Materials, Supplies, & Cutting Diagram

A	Sides (2)	¾ ply. - 19½ x 28½
B	Case Divider/Bottom (2)	¾ ply. - 16¼ x 20
C	Case Top (1)	¾ ply. - 19½ x 20
D	Side Edging (4)	¾ x ¾ - 28½
E	Top/Bot./Divider Edging (6)	¾ x 1¼ - 19½
F	Corbels (4)	¾ x 2½ - 5½
G	Towel Bars (2)	1-dia. x 20
H	Arms (2)	¾ x 3½ - 21
I	Drawer Sides (2)	½ x 4¾ - 16
J	Drawer Front/Back (2)	½ x 4¾ - 18
K	Drawer Bottom (1)	¼ ply. - 15½ x 18
L	Drawer False Front (1)	¾ x 5 - 19¼
M	Door Stiles (2)	¾ x 2¾ - 18½
N	Door Rails (2)	¾ x 2¾ - 14½
O	Door Center Stile (1)	¾ x 2¾ - 13¾
P	Door Panels (2)	¼ ply. - 6¼ x 13¾
Q	Shelf (1)	¾ ply. - 15¾ x 19⅜
R	Shelf Edging (1)	¾ x ⅜ - 19⅜
S	Base (1)	¾ ply. - 21 x 21
T	Base Edging (4)	¾ x ⅜ - 21¾
U	Rack Sides (2)	½ x 3¾ - 26½
V	Rack Top/Bot./Shelves (4)	½ x 3¾ - 19
W	Shelf Retainers (3)	½-dia. x 19
X	Rack Back (1)	¼ ply. - 19½ x 26½
Y	Cutting Board (1)	1½ x 19¼ - 21

- (1 pr.) 120° Full-inset Hinge
- (4) 4" Locking Casters
- (2) 96mm Aluminum Door Pulls
- (4) 2" Anti-Skid Adhesive Discs
- (1 pr.) 16" Full Ext. Drawer Guides
- (4) Shelf-Support Pins
- (16) #14 x ⅝" Ph Woodscrews
- (4) #8 x 1" Fh Woodscrews
- (4) #8 x 1½" Ph Woodscrews
- (13) #6 x 2" Fh Woodscrews
- (6) #6 x 1" Trim head Woodscrews

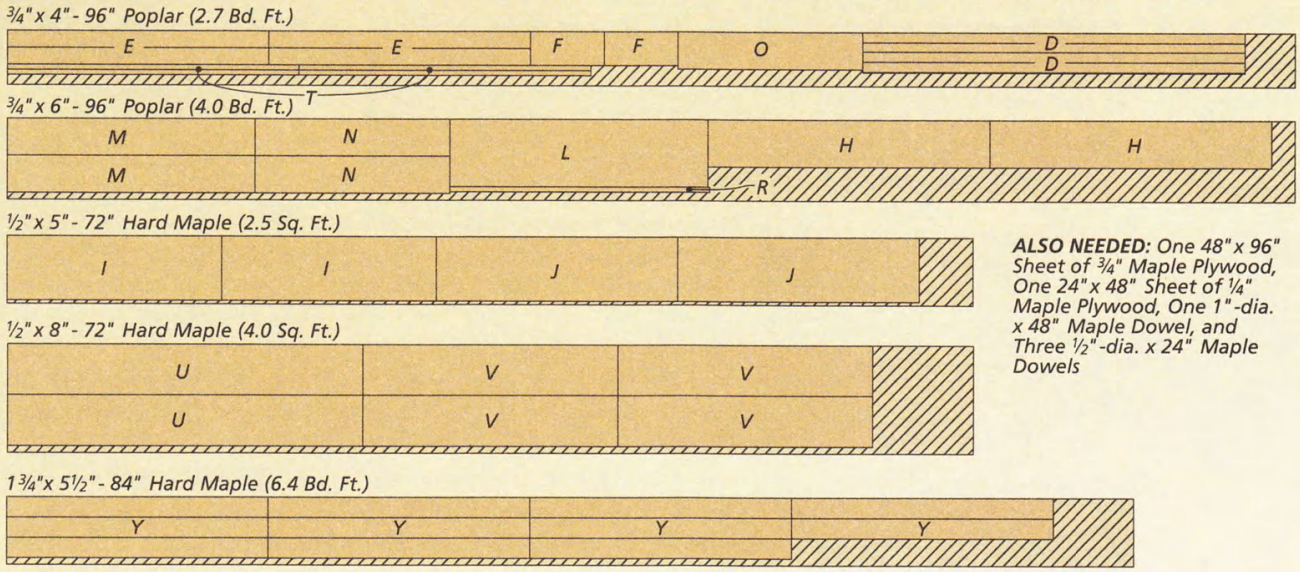

ALSO NEEDED: *One 48" x 96" Sheet of ¾" Maple Plywood, One 24" x 48" Sheet of ¼" Maple Plywood, One 1"-dia. x 48" Maple Dowel, and Three ½"-dia. x 24" Maple Dowels*

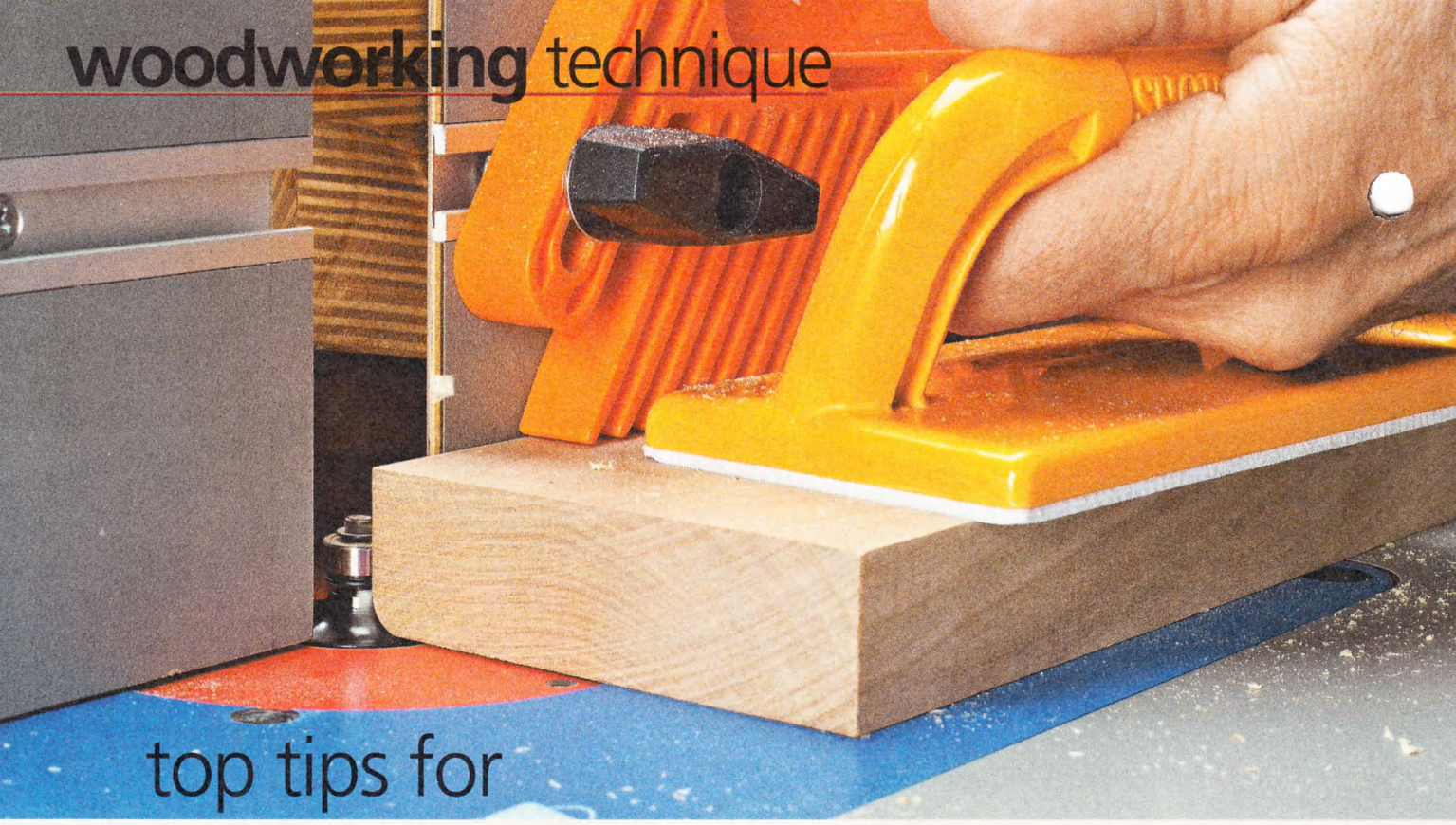

top tips for

Routing Perfect Profiles

Creating edge profiles is a basic routing skill. Here are a few simple strategies that will help ensure smooth, accurate results.

You see them in most woodworking projects: Profiles such as roundovers, chamfers, ogees, or coves. In some cases, they're simply used to soften the edges of a piece of furniture and make it feel nicer to the touch. Other times, they add a distinctive, decorative aspect to the project.

Often, however, the technique for making these cuts is rarely discussed. And while it does seem simple, there are a few tips that can ensure you get the best results and end up with clean, crisp profiles every time.

Here, I'll help you in the three ways you'll likely create profiles: With a router table and fence, freehand on the router table, or with a hand-held router.

REMEMBER THE BASICS. Regardless of the method you use to rout the profiles, it's important to remember that keeping your router bits clean and sharp will give you the best results. Also, push the wood past the bit at a steady feed rate to prevent burning — not too fast, and not too slow.

ROUTER TABLE & FENCE

When working on a straight, square workpiece of a reasonable size (30" or less in length), the best approach to profiles is to use a router table with a fence to guide the piece past the bit. There are a few things to keep in mind as you get ready to make a profile on the router table.

SET THE FENCE PROPERLY. How you set up the router table is an important consideration to make before you start routing. In particular,

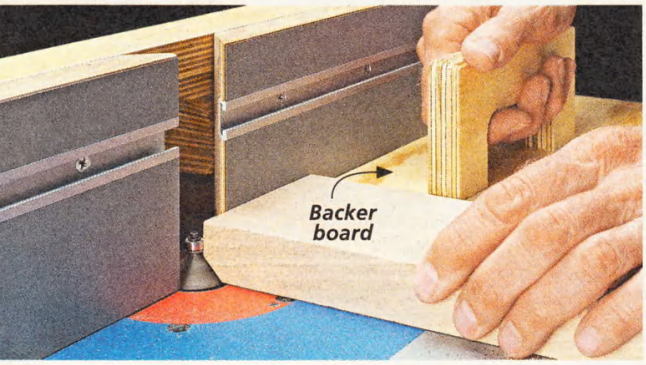

When routing end grain, use a wood backer board to prevent any tearout.

it's important that the face of the fence is set flush with the bearing on the router bit. This ensures accuracy because the leading edge of the workpiece contacts the bearing as it leaves the face of the fence.

Along those lines, set the ends of the fence as close to the bit as possible. This reduces the possibility of the workpiece tipping inward between the end of the fence and the bearing.

FEATHERBOARDS & PUSH BLOCKS. A featherboard will ensure that your workpiece stays flat on the table and against the fence. And rubber push pads let you feed the board safely past the bit (main photo on the facing page).

BACK UP END GRAIN. If you have to rout end grain on the router table, it's important to support the workpiece from behind with some sort of wood backer board (see the lower photo on the facing page). This will help prevent tearout on the trailing edge.

FREE-HAND ON THE ROUTER TABLE

For curved workpieces, you'll need to rout the profile on the router table free-hand, without using the fence. Here, the bearing on the bit will guide the piece. But there are still some tips that help ensure a quality cut.

USE A STARTER PIN. A starter pin on the insert plate lets you pivot the workpiece into the bit for greater control and safety. It's a good idea to practice your pivoting motion a few times with the router off before trying it with a spinning bit (lower left photo).

USE A HOLDER FOR SMALL PIECES. If you have to rout small pieces, using a holder of some kind will help to keep your hands in a safe position as you rout. A handscrew, with its wood jaws, is a good choice here.

HAND-HELD ROUTING

When a piece is too large or unwieldy, I forego the router table and go back to making my profiles with a hand-held router.

ROUT THE ENDS FIRST. For workpieces where the profile runs all the way around the perimeter, you'll want to rout the end grain before the edges. The ends are more likely to tear out. Then, you can clean up that tearout with the edge pass (see the photos above right).

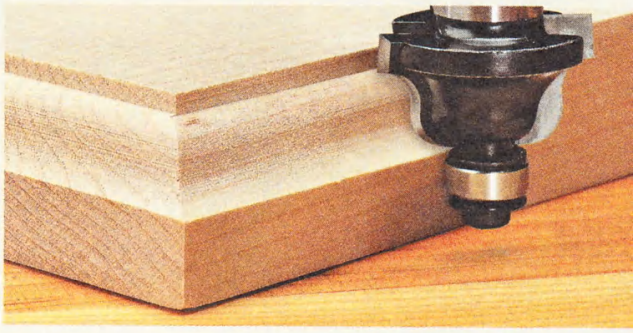

▲ Rout end grain first (upper photo). That way, you can clean up the cut with a pass along the edge (lower photo).

FINISHING PASS. Finally, one of the best ways to prevent burning is to move the router at a steady, consistent rate. Even then, however, there might still be some woods that have a tendency to develop burn marks.

In these situations, I like to make an initial routing pass that is almost — but not quite — at full depth. Then I fine-tune the router setup just a hair, and make a final pass to create a smooth, even profile. W

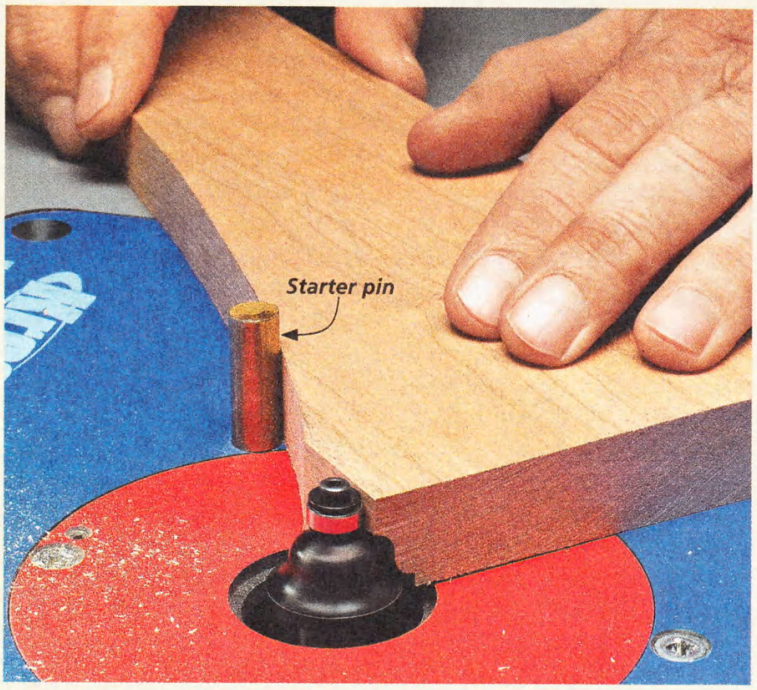

▲ When routing freehand on the router table, the bearing on the router bit guides the cut. A starter pin allows you to pivot the piece into the bit for more control when starting the cut.

Setup Block

For common profiles (roundovers and chamfers come to mind), you can make a setup block with a perfect profile on each of the four edges. Label each one, and then you can use the block to set up the router table for future cuts.

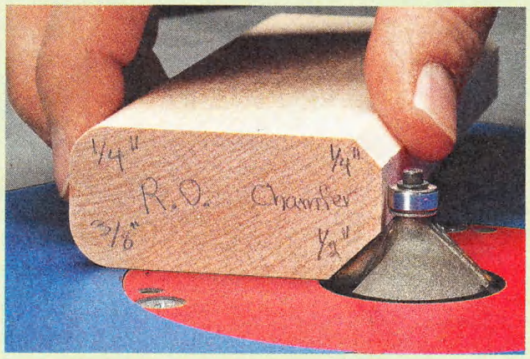

▲ By making your own setup block, you can dial in the bit height for your favorite profiles quickly and accurately.

a fresh look at Cordless Drills

Advances in technology have made it a great time for drill shopping. Here's what to look for and how to get the most from a cordless drill.

Like me, you probably have a well-used cordless drill in your woodworking shop that's an important part of your tool arsenal. And I'm guessing that every once in awhile, you probably rely on that trusty drill for a lot more than driving screws.

Let's face it: A lot of times, a cordless drill is simply handier and easier to set up and use than a drill press. That's why I'll turn to my drill for tasks like drilling countersunk holes for screws or boring holes for hardware like shelf pins and door pulls.

WHAT'S NEW WITH DRILLS? Recently, though, I found that my old drill wasn't holding a charge quite as well as it used to. So I decided to go shopping for a new one. And what I found is that the most recent batch of cordless drills has changed a lot — and the changes have created an overall better woodworking tool.

Some of the advances in cordless drills are easy to see. For example, take a closer look at the battery on the drill shown at left. Thanks to lithium-ion technology, the battery is significantly smaller and lighter but has the same power and run time as other 12-volt drills. If you have a lot of holes to drill or screws to drive, then you can see how the lightweight package offered by this and similar drills is going to be a lot easier on your hands and arms.

Unlike older nickel-cadmium batteries, lithium-ion batteries hold their charge when not in use. That means you can pick up the drill a week from now and go right back to work.

The new batteries aren't the only advantages you'll find with today's cordless drills, either. As you can see at left, the drill itself has become more streamlined, as well. This helps it fit better into compact cabinets and other tight spaces (main photo above). Plus, many boast innovative features like built-in LED lights that turn on when you engage the trigger.

GET MORE FROM YOUR DRILL. Whether you're using your trusty old drill or a brand new one, there

Today's compact, streamlined cordless drills are well-suited for woodworking.

are a few tricks that can introduce a measure of accuracy and precision to working with one. Here are my suggestions.

GET SOME COUNTERSINK BITS. For woodworking, the most common use of a cordless drill is for installing woodscrews. And you can make your drill even better at this simple task by purchasing a set of countersink bits that match the screws you use.

These bits feature a twist bit that drills a pilot hole for the screw, and a conical cutter that bores a perfect countersink for the screwhead. The result is a precise hole every time that fits a screw like a hand in a glove.

SWITCH TO BRAD POINTS. For drilling other holes in wood, woodworkers all too often will turn to a standard twist bit. In reality, though, a twist bit is not the best choice for woodworking. It has a conical cutting tip, and as a result, the bit tends to "skate" around on the surface of the wood and can lead to imprecise holes.

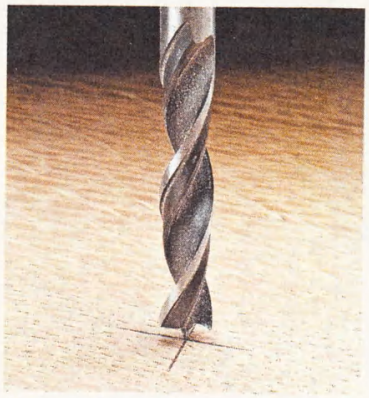

▲ The fine tip on a brad point bit prevents it from skating around on the wood.

▲ A countersink bit is your best friend when it comes time to drill pilot holes for screws.

Instead, invest in a set of brad point bits. A brad point bit has a fine point that drills precisely where you want it to, without skipping around on the wood (see the photo above).

SET YOUR DEPTH. One of the drawbacks to using a cordless drill rather than a drill press is that you can't easily set the depth of the hole. But there are a couple of workarounds for this situation. One option is to purchase stop collars. These collars are tightened on a bit to prevent it from drilling past a certain depth (above). Another tip is to wrap masking tape around the bit to mark the depth of the hole (below).

▲ A scrap of pegboard makes a simple template for drilling ¼" shelf pin holes.

MAKE SIMPLE TEMPLATES. A cordless drill may lack the precision of a drill press, but there are ways to get more accuracy from a handheld version. One method is to use it in tandem with a template for operations like drilling shelf pin holes. In many cases, this template doesn't have to be complicated. For example, a scrap of pegboard makes a perfect template for drilling ¼" shelf pin holes (right photo above).

AN ESSENTIAL TOOL. The humble cordless drill is truly a must-have tool for any shop. And advances in cordless technology have made today's drills more useful than ever before. W

◄ An old trick for setting the depth of holes is to wrap tape around the drill bit.

Drilling in Tight Quarters

Another accessory you'll want to consider for your cordless drill is a right-angle drilling attachment. Woodworking presents a lot of cramped spaces where a regular drill just won't fit. This $20 add-on solves that problem by allowing you to both drill and drive with ease.

▲ For tight spaces, just use your standard drill and an inexpensive right-angle attachment.

consistent results with Gel Stain

Eliminate blotching, runs, and drips by using gel stain. It can take most of the worry and hassle out of staining your projects.

Staining wood can be problematic. With conventional oil stains, the pigment always settles in the can. Even when fully stirred, it doesn't always penetrate evenly, leading to a blotchy result. On top of that, lap marks, runs, drips, and streaking are continual headaches. That's why I find myself turning to gel stains more often these days. The application process is easy, and the results are consistent, regardless of the type of wood.

Gel stain is available in a variety of colors from several companies.

WHAT IS IT? Gel stain is an oil-based stain blended with resins, pigments, and a thickening agent to create a heavy consistency (like pudding). The thickness prevents it from penetrating very deep into the wood. The consistency of the gel also makes it much easier to use when staining vertical surfaces, like table legs and cabinet sides. On top of that, gel stains don't show lap marks, and if used properly can provide twice the coverage of ordinary stains.

COLORS. The colors available are more than sufficient to cover just about any type of style or finish you're looking for, from light pine to dark walnut. Of course, you can also mix the colors to fine-tune a color if you need to match something specific.

Mixing can be a challenge, however. The deep pigments used in gel stain make it impossible to judge the results until after spreading and wiping off. You'll need to experiment a bit to dial in the color you're after. Also, using a thinner is not recommended.

MONEY-SAVER. The thing I like most about gel stain is how easy it is to make inexpensive wood look great. The poplar shown in the main photo is a perfect example.

▲ A squeegee can be used to remove the gel without having to throw it away (you can put it back in the can). When finishing large pieces, move the stain to another section of the project.

The green streaks usually present in poplar make it unsuitable for most kinds of furniture, in spite of it being an otherwise great hardwood. A coat of gel stain makes it look like a more expensive wood, covering the color differences while preserving the grain.

POSSIBILITIES. But beyond totally changing the color, another benefit of gel stain is that you can use it to blend subtle variations in wood colors to get a more uniform appearance. The mahogany tabletop in the photos at right is a good example of this.

You can see the lighter and darker sections of the different grains in the mahogany. But after an application of mahogany gel stain, the surface has a much more consistent color. Gel stain is also a good choice for blending the sapwood and heartwood of cherry or walnut.

The downside of this is that gel stains can obscure the grain a bit. So if you have a piece of furniture that features unusual or particularly interesting grain, this is not the best option for adding color.

APPLICATION. As you can see in the main photo on the opposite page, I use an inexpensive foam brush to apply the initial coat. You can use bristle brushes or even a rag to apply the gel stain, as well. To me, a foam brush is simply more convenient, especially when getting into tight corners. These brushes also are a bit firmer than bristles, so they can move the gel more effectively.

REMOVAL. When it comes to removing the gel from the workpiece, I start with a squeegee to remove the bulk of the stain. This allows you to save it rather than throw the excess away. The left photo above shows what I mean.

For the final cleanup, just wipe off the excess gel with a clean, lint-free cloth. You can add another coat in a few hours if you want a deeper color.

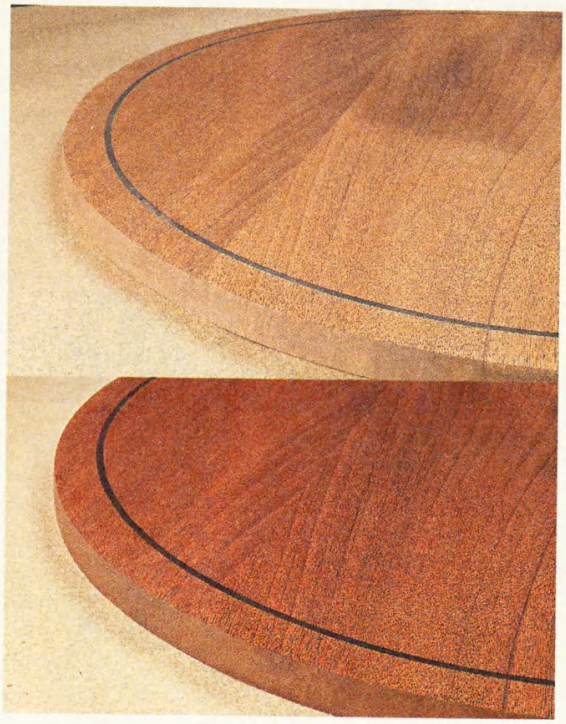

▲ Gel stain is a great way to blend colors in different grain patterns.

The resins used in gel stains can cause some solvent-based finishes, like lacquer, to react badly. But the box below can help you with a compatible finish that will protect both the color and the project. Best of all, like the stain, gel finish is easy to use. W

Gel Finish

A good choice for a clear finish on a gel stain is a gel topcoat. It's as easy to apply as the stain. On top of that, a single application of gel finish provides a thicker coat for greater protection of the surface.

As you can see in the photo at right, you can wipe on a coat of finish with a foam brush. I usually apply a fairly heavy first coat and let it sit for a few minutes. After that, wipe it off with a lint-free cloth, and buff it a little for a nice sheen. A couple coats will give you long-lasting protection.

Gel finish won't chip, crack, or peel like many other finishes. And it's resistant to water and alcohol, as well.

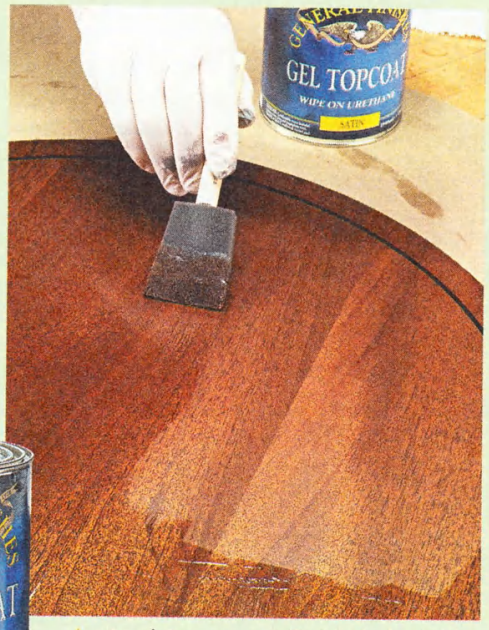

▲ Applying a gel finish is just like applying the stain. Just brush on a coat and then wipe it off.

Using Edge Grain

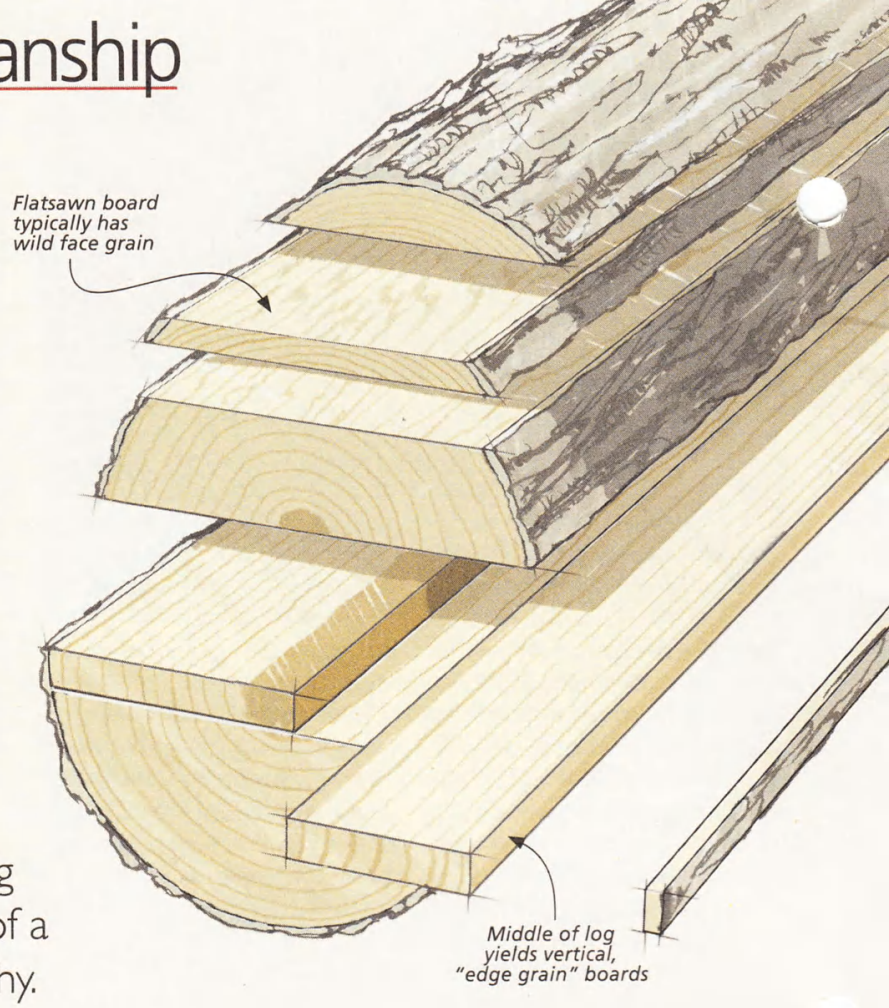

Grain direction makes a big difference in the strength of a project. Here's a look at why.

When it comes to selecting wood for a project, most of the time I'm interested in appearance. I look for things like color, figure, and a pleasing grain pattern.

But for certain projects, like the cutting board shown on page 34, strength and durability are even more important than appearance. Don't get me wrong; I still want the project to look good. But in these cases, I'm more concerned with how the project will hold up under use.

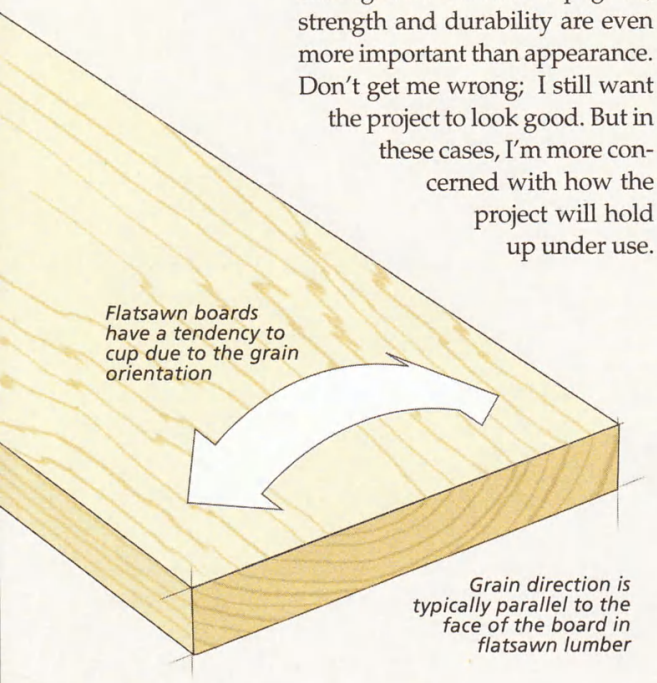

Of course, a good first step is to choose a species of wood known for its strength — like oak or maple. But going beyond that, another important consideration is grain orientation.

I'm not talking about the direction of the grain (cross grain vs. long grain) but rather, the direction the grain runs in relationship to the face of the board. And this all has to do with the way the log is sawed at the mill.

SAWING LOGS. Most of the time, logs are milled to yield the maximum amount of useable lumber. Known as "plain" or "flat" sawing, this typically results in the bulk of the boards being sliced from the log in such a way that the growth rings of the tree run roughly parallel with the face of the board, as shown in the drawing above.

You can usually identify plainsawn lumber by looking at the end of the board. The growth rings will appear as wide, curved lines, resembling a series of "smiles." And the face grain will typically have a distinctive pattern, particularly in ring-porous woods such as oak. This "cathedral" pattern is due to the fact that the saw blade cuts across the growth ring at a shallow angle, making the rings appear widely spaced.

Although flatsawn lumber is perfectly suitable for most projects, the boards can be prone to cupping due to the orientation of the grain (drawing at left). And depending on the species, the face grain can have a rather wild appearance that you may find either appealing or distracting.

EDGE GRAIN

Out of every flatsawn log, there will usually be a couple of boards where the growth rings run vertically, or perpendicular to the face of the board. Because of the orientation of the growth rings, these boards will be more dimensionally stable. And they'll also have

a straight, even grain pattern. And since the growth rings are more tightly spaced on the face of the boards, the surface will be tougher and more durable.

In fact, years ago sawmills figured out a couple of different ways to saw up logs so that the grain runs vertically on nearly every board. The problem with these methods (quartersawing and riftsawing) is that they're pretty wasteful, resulting in less useable lumber. So the cost is a lot higher than flatsawn lumber.

Because of this, nearly all the lumber you'll find in home centers is flatsawn. And even if you shop at a hardwood lumber dealer, you may have to special order quartersawn or riftsawn lumber.

EDGE GRAIN CONSTRUCTION. Fortunately, there's another way to achieve the benefits of edge grain lumber, even if flatsawn lumber is all you have available. And that's by gluing up your own edge grain panels.

If you take a look at the end of a typical flatsawn board, you'll notice that the growth rings run nearly parallel along the edges. So the trick is simply to rip the board into narrow strips and then turn each strip 90° so the rings run vertically (facing up). Then you can glue the strips together so that the "edge" grain is now the "face" grain. You can see what I'm talking about in the drawing above.

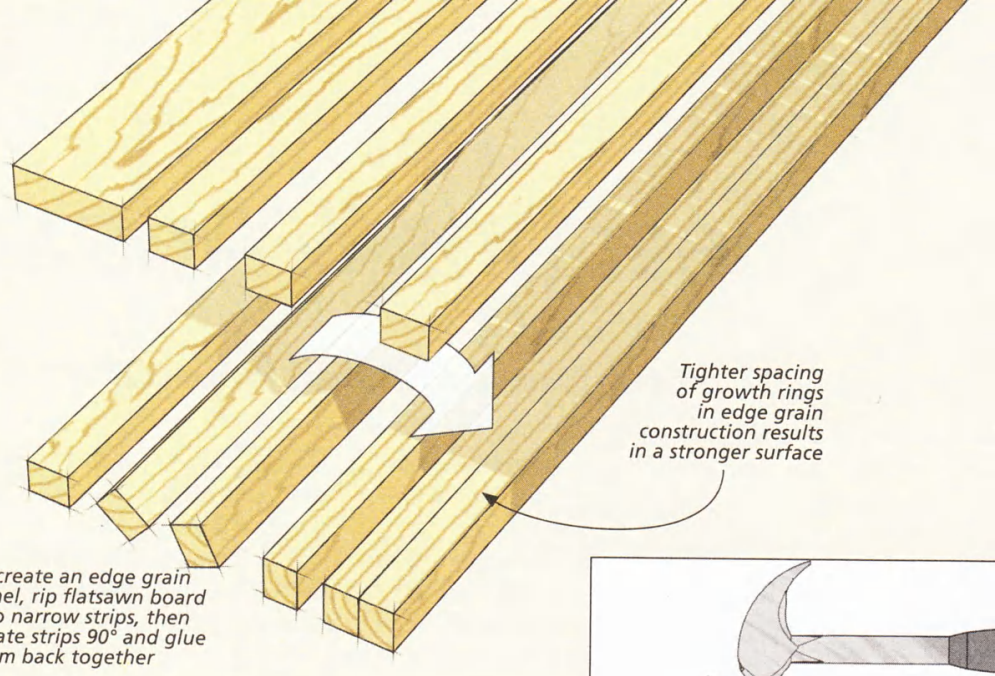

To create an edge grain panel, rip flatsawn board into narrow strips, then rotate strips 90° and glue them back together

This technique results in a panel where most of the growth rings are oriented vertically, or perpendicular to the face of the panel. Consequently, the panel is less likely to cup than if it was glued up out of face-grain boards.

But more importantly, the edge grain is harder and tougher than the face grain, so the panel is more durable. This is why you'll see edge grain construction used for things like cutting boards, kitchen counters, workbench tops, and even bowling lanes. Basically, any project with a surface that is going to be subjected to a lot of pounding, hammering, or other abuse is a good candidate for edge grain construction.

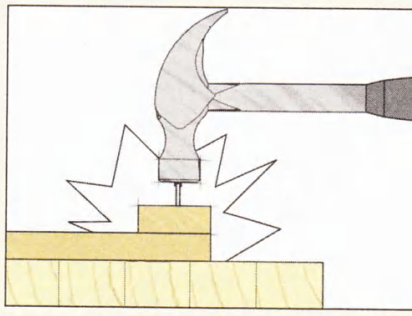

▲ An edge grain workbench top can stand up to hammering and repeated blows.

From an appearance standpoint, laminated panels like this aren't suitable for every project. But where strength is more important than looks, edge grain construction makes sense. And for an even tougher-wearing surface, take a look at the box below on end grain construction. W

A Closer Look: End Grain

While edge grain construction is often used for cutting boards, butcher blocks were traditionally made using end grain construction. In this method, blocks of wood are glued together so the end grain is facing up, as shown in the drawing at right.

End grain is even tougher than face grain or edge grain, so it's a good choice for something like a butcher block that is subject to pounding and chopping. But there's an added benefit. Because of the long, cellular structure of wood, end grain will stand up to cuts and slices from kitchen knives and cleavers a lot better than edge grain. Cuts made in end grain tend to close back up over time, making an end grain block "self-healing."

The downside is that making an end grain cutting board or chopping block is more work because it usually involves gluing up a lot more pieces than with edge grain construction. And end grain looks quite different than edge grain or face grain. But for something like a butcher block, this appearance is actually part of the charm.

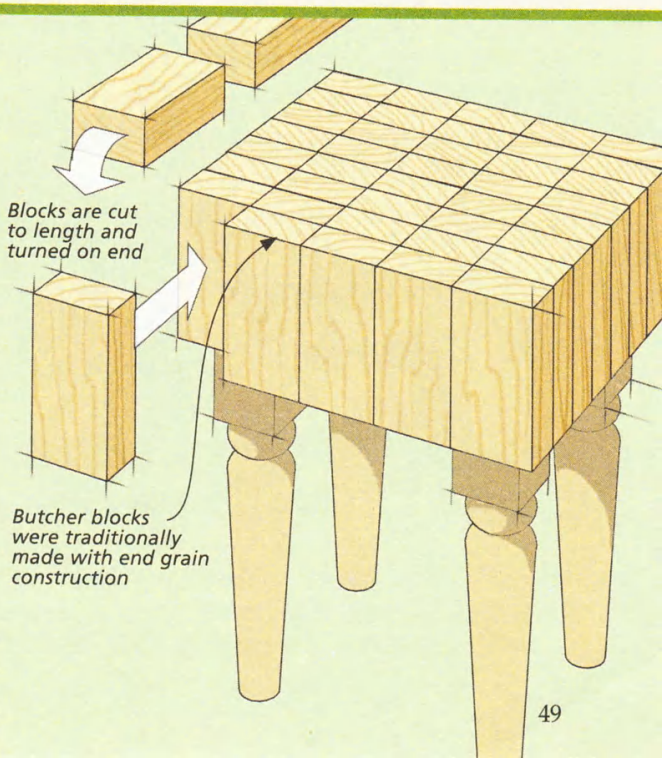

Questions & Answers

Miter Saw or Sliding Miter Saw?

Q ***I'm thinking about adding some tools to my shop and can't decide between buying a standard miter saw or a sliding miter saw. What are the pros and cons of each?***

Dan Marshall
Des Moines, Iowa

A Standard miter saws have been around for many years while sliding miter saws are a relatively new arrival. The functional difference is illustrated by the photos below. You make a cut with a miter saw by simply pivoting the blade down into the workpiece. A sliding miter saw (slider) works like a cross between a miter saw and a radial arm saw. As well as pivoting up and down, the blade also travels back and forth along a pair of rails.

The advantage to this feature is increased capacity of cut. A 10" miter saw limits you to approximately a 6"-wide cut at 90°. However, a slider offers a crosscut capacity of about 12".

ALL THE SAME. Depending on the brand and model, both types will make miter and bevel cuts in either direction. And likewise, you'll find that miter saws and sliders come in the same range of blade sizes — from 8" to 12". So on these two points, the performance matchup is a draw.

USES. Miter saws were originally designed for mitering and fitting moldings like baseboard and door and window trim in houses. But they can also be used for the same purpose in the shop as long as the pieces aren't too wide. If this is all you want to do with the saw, a standard miter saw might be the best way to go.

A slider will also handle this job, but the extra capacity of cut allows it to take on other chores as well. You can use a slider to cut wide stock to rough size or even wide workpieces to finished size. It will also handle accurate miter cuts on wider pieces.

SPACE. However, capacity is not the only consideration. The choice might depend on how much space you have to dedicate to the saw. You'll find that even a large miter saw is pretty compact when compared to a slider. The width of the saws won't be much different, but the rails add considerably to the depth of a slider and require clearance away from any obstruction. In a small space, a slider might not be practical.

PORTABILITY. Along similar lines, a miter saw will be easier to move from job to job or from storage to benchtop. A heavier and bulkier slider usually works best as a stationary tool with its own dedicated space in the shop. A mobile stand can also be a good option for a slider.

DOLLARS & CENTS. A major consideration may be cost. A good miter saw can be purchased for around $250. A slider will run you $500 to $600 — quite a difference.

In my mind, versatility in a tool is usually a good thing. So on this point alone, the scale tips toward the slider. But if you have limited space, a limited budget, or don't need the extra capacity, a miter saw would still be a good investment. W

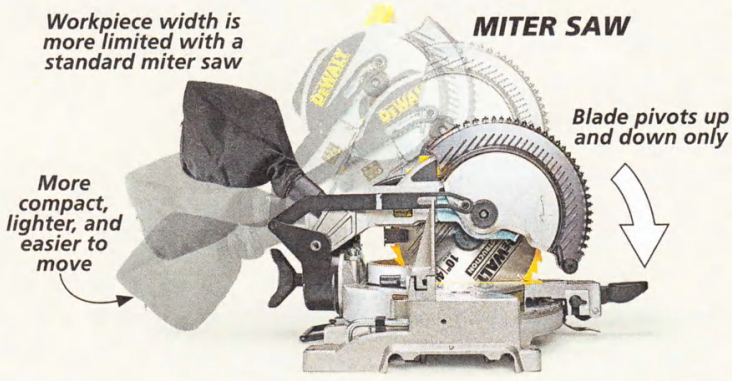

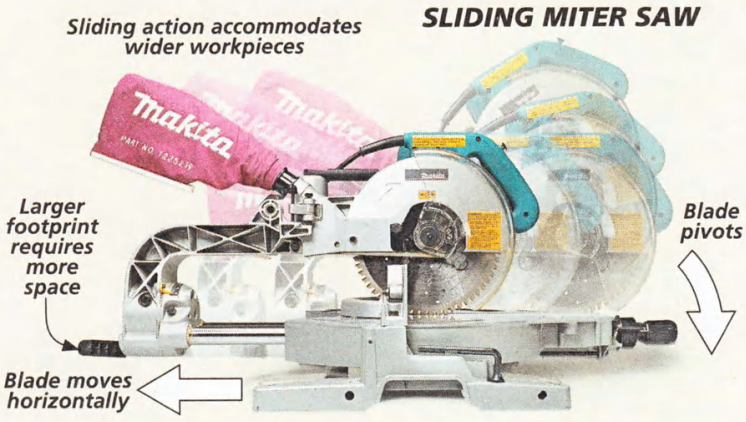

▲ The blade of a standard miter saw (upper photo) pivots down into the workpiece. A slider (lower photo) requires extra clearance to allow the blade to also move horizontally.

hardware & supplies

Sources

Most of the materials and supplies you'll need to build the projects are available at hardware stores or home centers. For specific products or hard-to-find items, take a look at the sources listed here. You'll find each part number listed by the company name. See the right margin for contact information.

The *Woodsmith Store*, in Des Moines, Iowa, is an authorized *Rockler* dealer. They carry many of the hardware items used in our projects. And they ship nationwide. Their customer service representatives are available for your calls from 8am – 5pm Central Time, Monday through Friday.

7 FORGOTTEN TOOLS *(p.10)*

- **Garrett Wade**
  Push Drill 69P01.01
- **Woodcraft**
  Spokeshaves. . . . . varies
  Bullnose Rabbet Plane . . . . varies
  Bevel Gauge . . . . . varies

SIGNMAKING KIT *(p.12)*

- **Rockler**
  2¼" Signmaker's Kit 48356
  ⅜" Signmaking Bit 36676
  3⅜" Signmaker's Kit 43820
  ⅝" Signmaking Bit 32443

SANDPAPER SHARPENING *(p.14)*

- **Rio Grande**
  Microfinishing Film . . . . . varies

SHELVING SYSTEM *(p.16)*

- **Lee Valley**
  30mm Shoulder Bolts . . 00N14.30
  50mm Shoulder Bolts . . 00N14.50
  17mm Bolt Caps 00N20.17
  ⅜" Bushings. 25K62.06
  Bushing Inserts. 25K62.20

The shelving system was painted with *General Finishes' Lamp Black Milk Paint*, sanded lightly on the edges for an aged look, and stained with *General Finishes' Georgian Cherry*. Two coats of wipe-on polyurethane were then applied.

DRESSER *(p.22)*

- **Lee Valley**
  96mm Pulls. 02A19.42
- **Amana Tool**
  Cove & Bead Bit 49208

The dresser was stained with *General Finishes' Gunstock Oil Stain* and then sprayed with two coats of semi-gloss lacquer.

KITCHEN CART *(p.34)*

- **Lee Valley**
  120° Inset Hinges. 00B15.24
  96mm Pulls. 01W97.42
  4" Plate Casters 00K22.10
  2" Non-Skid Discs 25K01.32
  16" Drawer Slides 02K42.16
- **Rockler**
  ¼" Nickel Shelf Pins 22773

The cart was painted with *Benjamin Moore's Jungle Canopy*, and the cutting board was finished with an oil/varnish blend.

CORDLESS DRILLS *(p.44)*

- **Rockler**
  Countersink Bits. . . . . Varies
  7-pc. Split Collar Set 68946
- **Amazon**
  Milescraft Drill90. . .B0001GL098

GEL STAINS *(p.46)*

- **Rockler**
  Gen. Fin. Gel Stain . . . . . Varies
  Gen. Fin. Gel Topcoat. 38154

MAIL ORDER SOURCES

Project supplies may be ordered from the following companies:

Woodsmith Store
800-444-7527

Rockler
800-279-4441
rockler.com

Amana Tool
amanatool.com

Amazon
amazon.com

Garrett Wade
800-221-2942
garrettwade.com

General Finishes
800-783-6050
generalfinishes.com

Lee Valley
800-871-8158
leevalley.com

Rio Grande
800-545-6566
riogrande.com

Woodcraft
800-535-4482
woodcraft.com

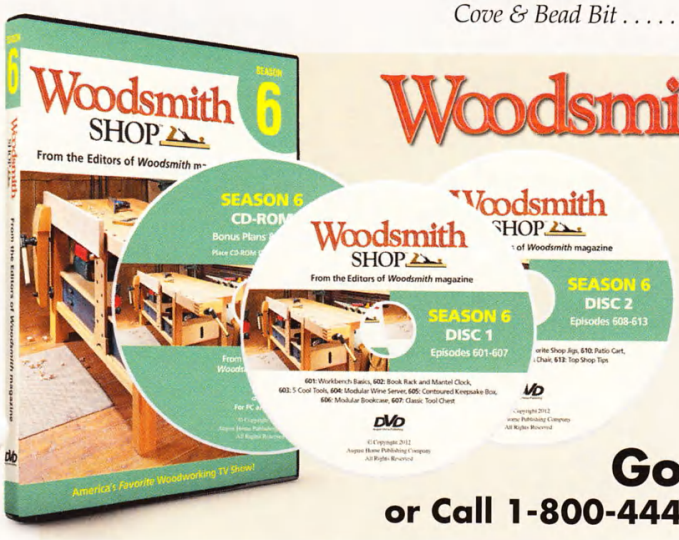

Woodsmith® SHOP DVDs

Get the all new season 6 DVD set of the ***Woodsmith Shop***! The set includes two DVDs with all the episodes plus a CD-ROM with bonus plans and articles. Collect the entire series by ordering individual seasons for $29.95 or save with package deals. Learn more at Woodsmith.com!

DVD Set: Season 6..... $29.95

Go to Woodsmith.com
or Call 1-800-444-7527 Today to Order Yours!

looking inside
Final Details

► *Dresser.* With an assortment of different drawer sizes, this dresser offers the perfect solution to your clothes storage needs. Step-by-step plans start on page 22.

▼ *Display Shelves.* Perfect for displaying plants or other items, the modular design of this project allows you to customize the shelves to suit your space. Turn to page 16 to begin building it.

▲ *Kitchen Cart.* The large cutting board on this cart offers plenty of workspace for prepping food. And narrow shelves at the back are perfect for small items. You'll find complete plans on page 34.